NO. 47 NOTES FROM THE SHOP $2.50

Woodsmith®

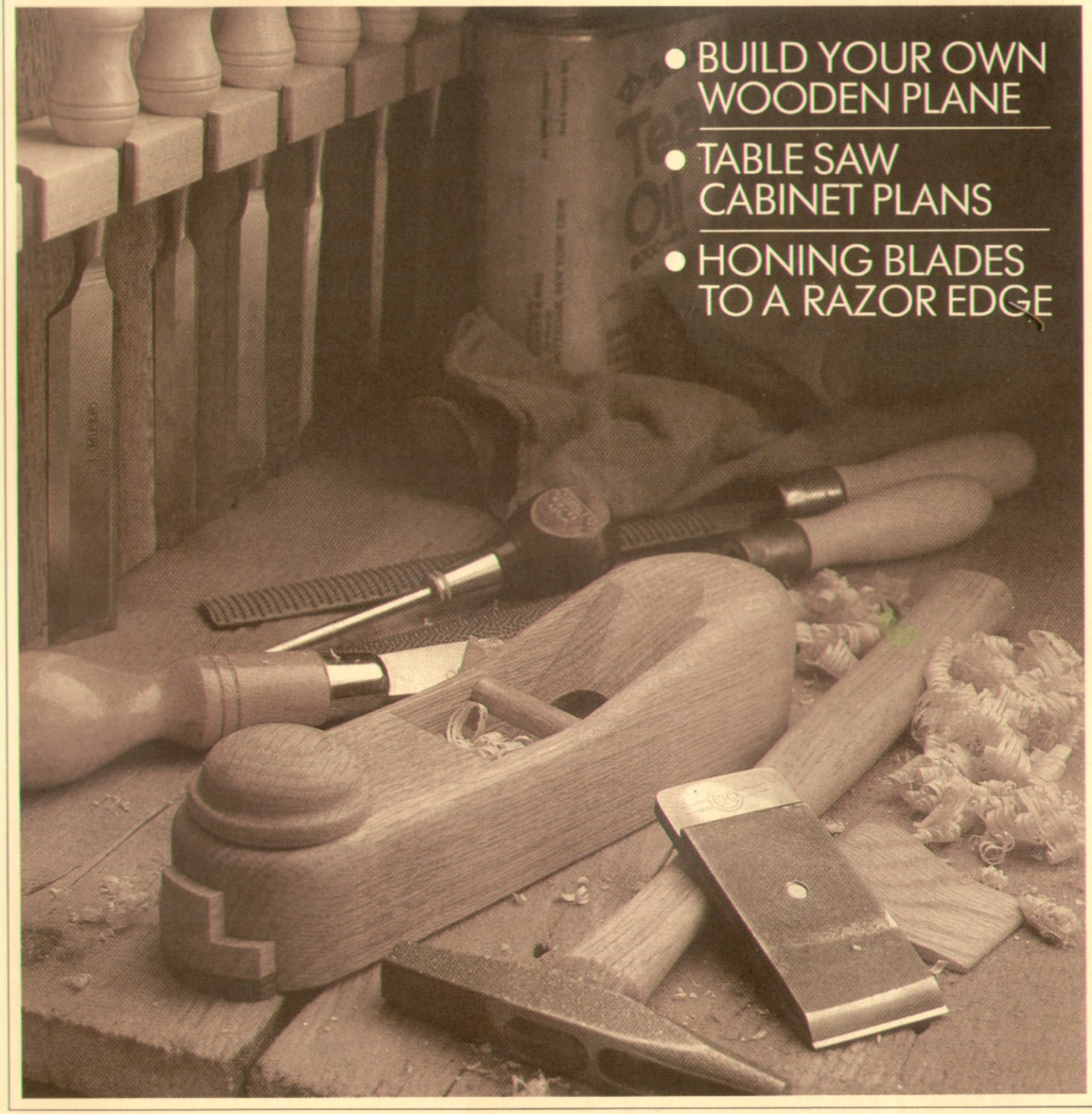

- BUILD YOUR OWN WOODEN PLANE
- TABLE SAW CABINET PLANS
- HONING BLADES TO A RAZOR EDGE

Woodsmith®

Number 47 October, 1986

Editor
Donald B. Peschke

Design Director
Ted Kralicek

Assistant Editors
Steve Krohmer
Douglas L. Hicks
Douglas M. Lidster

Technical Illustrators
David Kreyling
Mike Henry
Jim Prill

Subscription Manager
Sandy J. Baum

Subscription Assistants
Christel Miner
Vicky Robinson
Jackie Stroud
Pat Koob

Computer Operations
Ken Miner

Administrative Assistants
Cheryl Scott
Kate Bauma

Builiding Maintenance
Archie Krause

WOODSMITH (ISSN 0164-4114) is published bimonthly (February, April, June, August, October, December) by Woodsmith Publishing Co., 2200 Grand Ave., Des Moines, Iowa 50312.
WOODSMITH is a registered trademark of the Woodsmith Publishing Co.
©**Copyright 1986** by Woodsmith Publishing Co. All Rights Reserved.
Subscriptions: One year (6 issues) $10, Two years (12 issues) $18. Single copy price, $2.50 (Canada and Foreign: add $2 per year.)
Change Of Address: Please be sure to include both your old and new address.
Second class postage paid at Des Moines, Iowa.
Postmaster: Send change of address notice, Form 3579, to Woodsmith Publishing Co., 2200 Grand Ave., Des Moines, Iowa 50312.

BACK ISSUES

All back issues of *Woodsmith* are still available. Send for a free booklet describing the contents and prices of all back issues.

SAMPLE COPIES

If you have a friend who would like to see a copy of **Woodsmith**, just send the name and address, and we'll send a sample (at no cost).

Sawdust

ABOUT THIS ISSUE. Occasionally I like to build things just for the shop. One project I've been wanting to build for a long time is a new stand for the table saw.

The metal stands that typically come with table saws are okay, but they could be much more helpful with a little thought and effort. It would be nice, for instance, if they provided a way to hold the three essentials: the miter gauge, rip fence, and arbor wrench. But they don't.

That's all I had in mind as I began to think about a new stand. Then my "want list" began to grow. Adding a way to catch sawdust moved closer to the top of the list. Then it came to me that there was an awful lot of wasted space beneath the table saw that could be used for storage.

The cabinet/stand that evolved (shown on page 4) has provided more than storage. I was surprised to feel a new sense of order and organization around the saw. In the past the saw quickly became the center of chaos in the midst of a project.

Things seemed to accumulate around the saw to the point of being a hazard. Now with the new cabinet, all those things have a place within easy reach under the saw.

There's one other thing about this cabinet. As with any project shown in *Woodsmith*, it can be altered to fit your needs. In the case of this cabinet, I would encourage alterations — particularly as it affects the height of the saw table.

I've worked with Sears, Delta (Rockwell), Powermatic, and INCA table saws. Every one has a different working height — from 34″ on the Delta/Rockwell (which is too low for me) to 39″ on the INCA (which is too high for me).

One way to determine a comfortable working height is to measure from the floor to the top of your pants, then subtract 3″ to 4″. Another way is to measure from the floor to a point midway between your wrist and elbow. On me, these measurements come out between 36″ and 37″. So I built the cabinet with the working height of the table saw at this height.

OUTFEED TABLE. Whether or not you build the cabinet, there's one addition to a table saw that's well worth the effort. The outfeed table (shown on page 10) is a dream come true.

For years I've struggled with roller stands and various holders to support boards on the outfeed side of the table saw. They help, but they're not the best answer.

The worst situation seems to occur when ripping medium-length pieces (about 2′ to 4′ in length). As the cut is completed, I usually tip the piece off the end of the saw, grab the end, and lift it back.

But with pieces 2′ to 4′ long, this can be an awkward maneuver at best. Boards this long tend to be a bit too heavy to grab and pull up comfortably.

That's why I've wanted a convenient outfeed table. One that attached right to the saw, but could be easily folded away. Great idea. The only problem was designing a way to attach the table to the saw.

In one brain-storming session, we finally came up with a design that works. It's simple, easy to build, and does the job. If you don't add anything else to your saw, add this outfeed table.

CHOICES. After talking so much about table saws, I want to add one more comment. About half of this issue of *Woodsmith* concentrates on projects for table saws. And that's going to cause problems for everyone who uses a radial arm saw as his principal piece of equipment.

The choice of equipment for a woodworking shop can stir up a heated debate in a hurry. My feeling is this: Radial arm saws are designed for and excel at construction work (cutting dimension lumber to length). Table saws are designed for and excel at woodworking (both ripping and cross cutting lumber for cabinetmaking).

That's why we use table saws to build the projects shown in *Woodsmith*. I know this causes problems and some frustration for those with radial arm saws. But with the limited amount of space we have, we can only show one tool.

PLANES. That debate aside, there's one other tool I consider essential to every shop. I couldn't get by without a well-tuned, well-sharpened hand plane.

I know not everyone shares my enthusiasm for planes. The biggest difficulty seems to be sharpening the plane blade. And the biggest obstacles to sharpening are 1) working with a grinder, and 2) holding the blade at the right angle for honing.

The sharpening technique we're showing in this issue solves both of those problems — by eliminating them. You don't need a grinder (a simple steel plate works just as well), and there are honing guides that hold the blade at exactly the right angle. Sharpening couldn't be easier.

If you haven't tried it, spend just one evening to master the technique of sharpening. All it takes is the feel of that one perfect shaving from a well-sharpened plane to make it all worthwhile — especially if it's from a wooden plane you've made yourself.

NEXT MAILING. The December issue of *Woodsmith* (No. 48) will be mailed during the week of December 29, 1986.

Tips & Techniques

HEAT DECALS

In *Woodsmith* No. 45 there was a tip from Keith Anderson explaining how to copy patterns onto wood from a photocopy.

(Editor's Note: Keith explained how to copy a photocopied pattern onto wood by "ironing" the back of the pattern with a clothes iron. The heat transfers the ink toner from the photocopy directly to the wood.)

The uses for this method of image transfer as "heat decals" are almost unlimited. For example, toy delivery trucks with the logo of a local business, or wooden plaques or boxes with an old advertisement would be unique at a craft fair. Or you could even transfer your own homemade "handcrafted by" logo to personalize a project.

I discovered that using a woodburning pen connected to a standard light dimmer

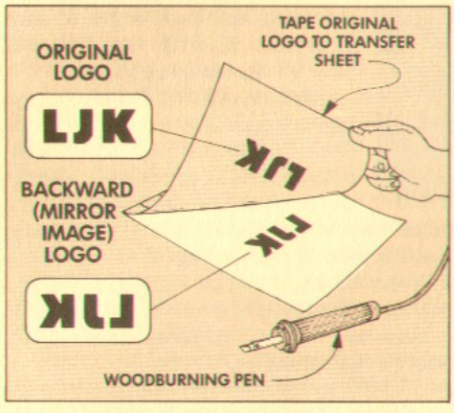

switch allowed the precise control needed to transfer very intricate designs to wood.

The mirror-image problem Keith mentioned can be easily corrected. First, make a standard photocopy of the logo you want on your project. Next, transfer this copy to another piece of paper with a woodburning pen. Use a series of light passes with the pen on the *back* of the photocopy with the dimmer switch set for a medium heat. This produces a *backward* (mirror image) logo on the transfer sheet.

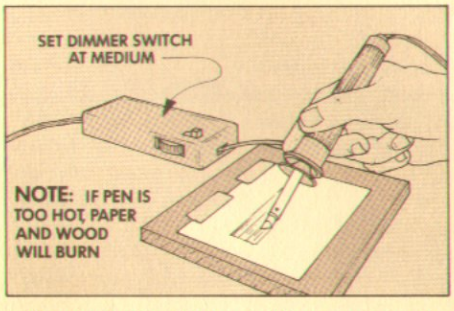

Now take the backward logo copy to the photocopy machine and make a fresh, toner-rich copy of it. When this backward copy is transferred (heated) onto the wood project, the logo will once again appear correct.

Note: If you have access to a photocopy machine that can make a copy on acetate (a clear plastic sheet), you can quickly make the backward copies by copying the logo on the acetate first. Then turn the acetate over in the photocopy machine to get the backward (mirror image) copy.

When transferring the copies to wood, tape down the photocopy along one edge so that the progress of the image can be periodically checked. If an area isn't dark enough, keep working over it with the hot pen until more toner is released. It takes a little practice to determine the correct amount of heat and time to keep the woodburning pen from burning the wood.

Most common finishes will work over the logo, but experiment first. I've had success with Deft Clear Wood Finish and shellac.

Guy Ingram
Danville, Kentucky

Editor's Note: We tried transferring a logo to a toy truck (see photo above) following Guy's suggestions and were impressed with the detail. We even tried using some of the new color photocopy machines at a local copy center and had good results.

Some brands of photocopiers use a toner that comes off when rubbed with an oil finish or under lacquer such as Deft. But a seal coat of shellac over the logo protects the toner from most top coats.

We used a woodburning pen that's often used by carvers who make detailed feathering on duck decoys, see Sources, page 24.

PREVENTING STATIC SHOCK

My shop vacuum has a plastic hose that builds up quite a static charge when the vacuum is running. When I used it to clean up around power tools, I got shocks from the static electricity generated by sawdust traveling through the hose.

To prevent the shock, I wired a piece of chain to the bottom of the vacuum. The chain drags on the concrete floor and grounds out the charge.

Gary Paine
Davison, Michigan

TRIMMING OFF KEYS

In *Woodsmith* No. 44 there's a technique for making miter and dovetail key joints on a box. After gluing the keys into the joint, it was recommended that the excess be cut off close to the box with a fine-toothed saw.

I tried it on the first corner but it was hard to keep from scratching the side of my box since the saw teeth have a slight set on the side of each tooth. To protect the wood on the next corner, I placed a piece of Formica (or poster board) on the side of the box. Then I laid the side of the saw on the Formica and cut the keys.

If the Formica is placed so its edge isn't quite up to the keys, the side of the saw teeth

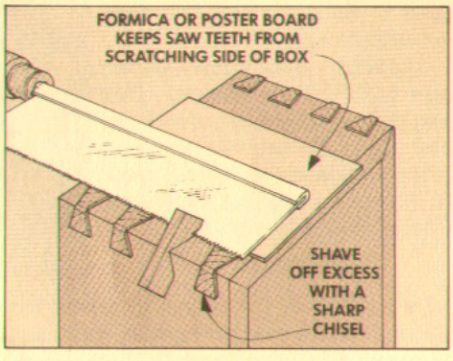

won't cut into the Formica making it easier to complete the cut. After the keys are trimmed off close, shave off any excess with a sharp chisel.

Lee A. Dunn
West Bend, Wisconsin

FINISHING NOOKS AND CRANNIES

I recently built a couple Model T toy trucks. With all the nooks and crannies I was hesitant about applying a finish without spray equipment.

To solve the problem I used a spray bottle (such as a Windex bottle) filled with Watco Danish Oil and in a few minutes my trucks were complete.

Dennis Bastian
Calumet, Michigan

SEND IN YOUR IDEAS

If you'd like to share a woodworking tip with other readers of *Woodsmith*, send your idea to: *Woodsmith*, Tips & Techniques, 2200 Grand Ave., Des Moines, Iowa 50312.

We pay a minimum of $10 for tips, and $15 or more for special techniques (that are accepted for publication). Please give a complete explanation of your idea. If a sketch is needed, send it along; we'll draw a new one.

Table Saw Cabinet

MAKING USE OF WASTED SPACE

This cabinet is just what I've always wanted for my table saw. It adds weight and stability, it rolls away for storage, it has a sawdust collection system in the cabinet, and it turns all the wasted space under the saw into much-needed storage.

But before getting into the construction of the cabinet, something should be said about its size. This cabinet will comfortably support a Sears 10" table saw or a Delta (Rockwell) 10" Contractor's Saw. (The overall width of the cabinet is sized to fit under the saw with extension wings.)

The height of the cabinet shown here is 23½" (with casters). This puts the working height of both the Sears and Delta saws at 36¼" (which is the same as the Sears saw on a Sears stand, but 2" higher than the normal Delta setup.)

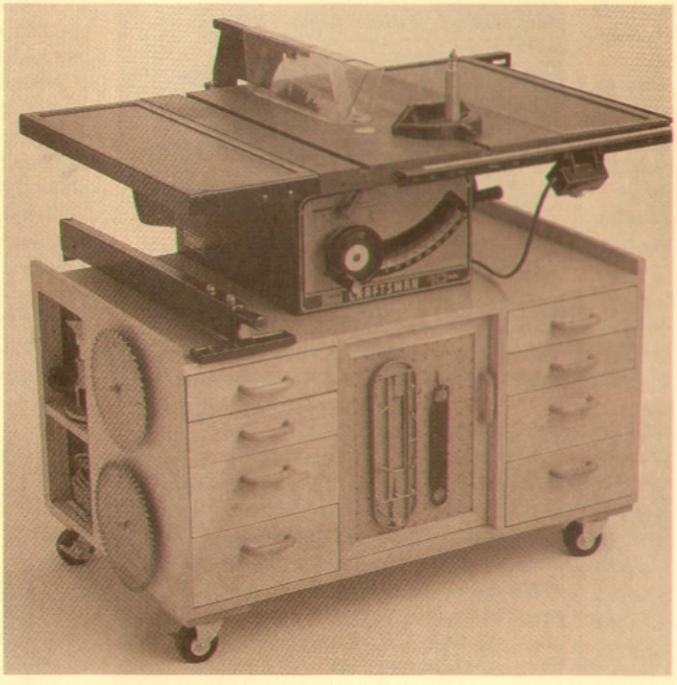

CUT PIECES TO SIZE

I started work on the cabinet by cutting the six main pieces (the top/bottom, ends, and dividers) to final size from a 4'x8' sheet of ¾" birch plywood. (Birch is a little more expensive than CDX fir plywood, but the final appearance is worth it.)

TOP/BOTTOM. First, cut the top/bottom pieces (A) to a length of 39" and to a width of 23¾", see Fig. 1.

ENDS. Next cut two end pieces (B and C) to a length of 20" and to the same width as the top/bottom pieces (23¾"), see Fig. 2. (Note: These pieces are wider than they are long, see grain direction in Fig. 5.)

DIVIDERS. Finally, cut the two dividers (D and E) to a length of 17 13/16" and to a width of 23½", see Fig. 3. (Note: These dividers are ¼" narrower than the other pieces to allow for a ¼" back.)

RABBETS AND DADOES

Once the six major pieces were cut to size, I laid out the positions of the rabbets and dadoes used to join them together.

It's important to lay out these cuts so there will be mirrored sets. To keep things straight, I marked the front and back edges of each piece, and also the face that will have all the cuts, see Fig. 5.

BACK RABBETS. Start by laying out and cutting rabbets for the ¼" Masonite back. These rabbets are on the inside back edge of the top/bottom pieces (A) and the inside back edge of both ends (B and C), see Back Rabbet Detail in Fig. 4.

Note: To keep things simple, all of the rabbets, dadoes, and grooves for the basic cabinet are cut to a common *depth* of ¼", only the width varies.

MATERIALS LIST

Overall Dimensions: 23½" h x 40" w x 24¼" d	
A Top/Bottom (2)	¾" ply. x 23¾ - 39
B Left End (1)	¾" ply. x 23¾ - 20
C Right End (1)	¾" ply. x 23¾ - 20
D Left Divider (1)	¾" ply. x 23½ - 17 13/16
E Right Divider (1)	¾" ply. x 23½ - 17 13/16
F Drawer Runners (16)	½ x ¾ - 13
G Separators (2)	¾" ply. x 12½ - 17 5/16
H Shelf Cleats (4)	13/16 x 1 - 17 5/16
I Back Panel (1)	¼" Mas. x 17 13/16 - 39
J Shelves (2)	¾" ply. x 7¾ - 12½
K Sm. Drwr. Fronts (4)	13/16 x 3¼ - 11⅞
L Lrg. Drwr. Fronts (4)	13/16 x 5¼ - 11⅞
M Sm. Drwr. Sides (8)	½ x 3¼ - 13¾
N Lrg. Drwr. Sides (8)	½ x 5¼ - 13¾
O Sm. Drwr. Backs (4)	½ x 2¾ - 11¼
P Lrg. Drwr. Backs (4)	½ x 4¾ - 11¼
Q Drawer Bottoms (8)	¼" Mas. x 11¼ - 13
R Catcher Front/Back (2)	13/16 x 2 - 10⅜
S Catcher Sides (2)	13/16 x 2 - 18⅛
T Catcher Runners (2)	¼" Mas. x 1¼ - 18⅝
U Catcher Cleats (2)	13/16 x 1¼ - 21
V Door Stiles (2)	½ x 1¼ - 17 3/16
W Door Rails (2)	½ x 1¼ - 10⅞
X Door Panel (1)	⅛" peg. x 10⅞ - 15 3/16
Y Caster Pads (4)	¾" ply. x 4 - 5

CUTTING DIAGRAM

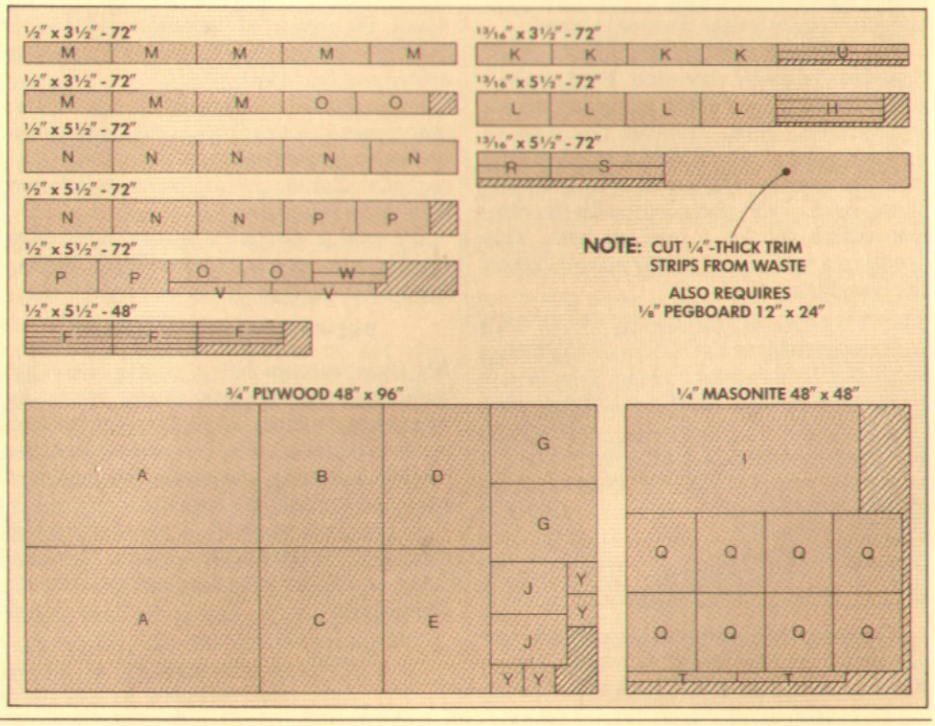

BOTTOM RABBETS. Next, lay out and cut the rabbets to join the bottom to the ends. These rabbets are on the bottom edge of both end pieces (B and C), see Bottom Rabbet Detail in Fig. 4.

Note: The width of these rabbets should equal the *actual* thickness of the plywood — which is usually a little shy of ¾" for hardwood plywood. But to keep things simple, all measurements are shown as ¾".

TOP DADO. Now lay out the position of the dadoes that are used to join the top (A) to the ends (B and C). To determine the location of these dadoes I wanted to plan ahead to allow enough space for the drawers below it. This requires an overall opening of 17 5/16" for two 3¼"-high drawers and two 5¼"-high drawers with a 1/16" gap between each drawer and the cabinet.

When I had this measurement I worked from the bottom edge up — allowing ¾" for the bottom rabbet (refer to Fig. 2), plus 17 5/16" for the drawers, plus ¾" for the thickness of the top (A). This left 1 3/16" as the measurement from the top edge to the top of the dado, see Fig. 2. (This position creates a raised edge to keep things from sliding off the cabinet, refer to photo.)

DRAWER RUNNER DADOES. After the top dadoes are cut, there are four more dadoes for the drawer runners in the end pieces (B and C) and dividers (D and E), see Figs. 2 and 3. However, the problem with laying out these cuts is that you're *not* working with the same measurements on the ends as on the dividers. The ends have to accommodate the top and raised edge that extends above the top.

To lay out the first (top) *runner* dado on the ends (B and C), measure down 3" from the top edge. Then continue to work your way down laying out the remaining dadoes as shown in Fig. 2.

Note: All of the measurements for the positions of the dadoes (shown in Figs. 2 and 3) are taken from the top edge of the workpiece to the top edge of the dado. This is the same measurement needed when setting up the saw — it's the measurement from the fence to the dado blade.

RUNNER DADOES ON DIVIDERS. The top runner dado on the dividers (D and E) is only 1 5/16" from the top edge, see Fig. 3.

Note: For ease of construction on a table saw, we've shown all of the runner dadoes going all the way to the back of the cabinet. But the drawers only run part of the way back. To get a slightly neater appearance, you could use a router and stop the dadoes 14" from the front edge.

SEPARATOR GROOVES. After the runner dadoes are cut, lay out and cut the vertical grooves for the separators (G) that divide the drawer compartments from the shelf compartments, refer to Figs. 7 and 8 on page 6. Locate these grooves 14" from the *front* edge of the ends and dividers, see Figs. 2 and 3.

FIGURE 1

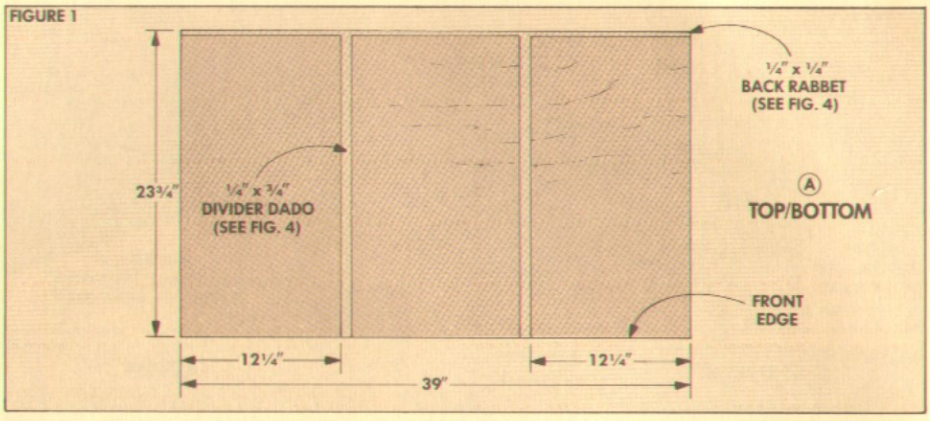

FIGURE 2

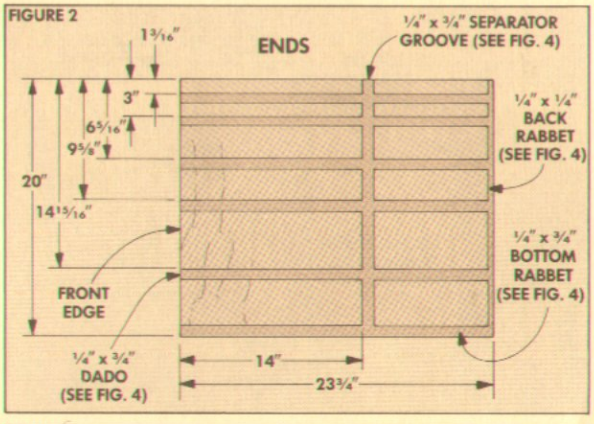

FIGURE 3

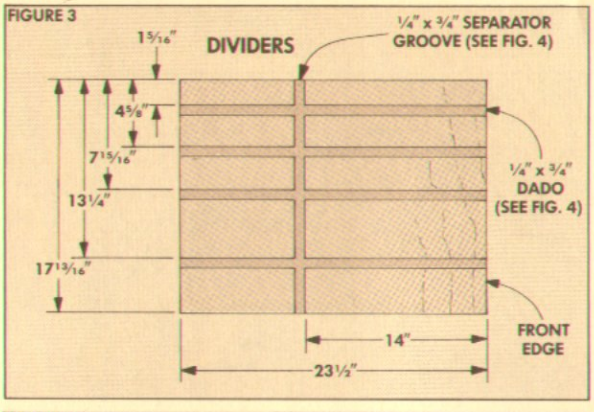

FIGURE 4

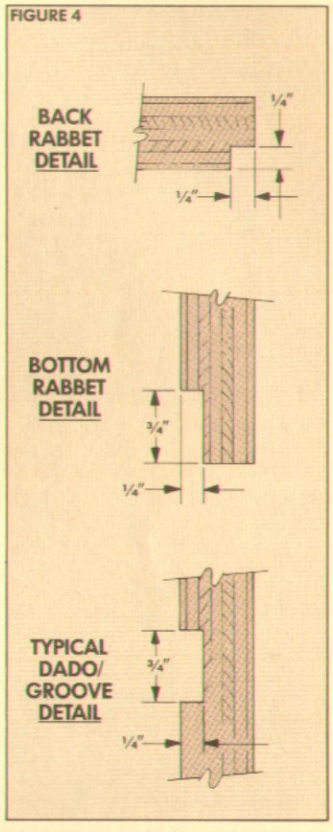

FIGURE 5

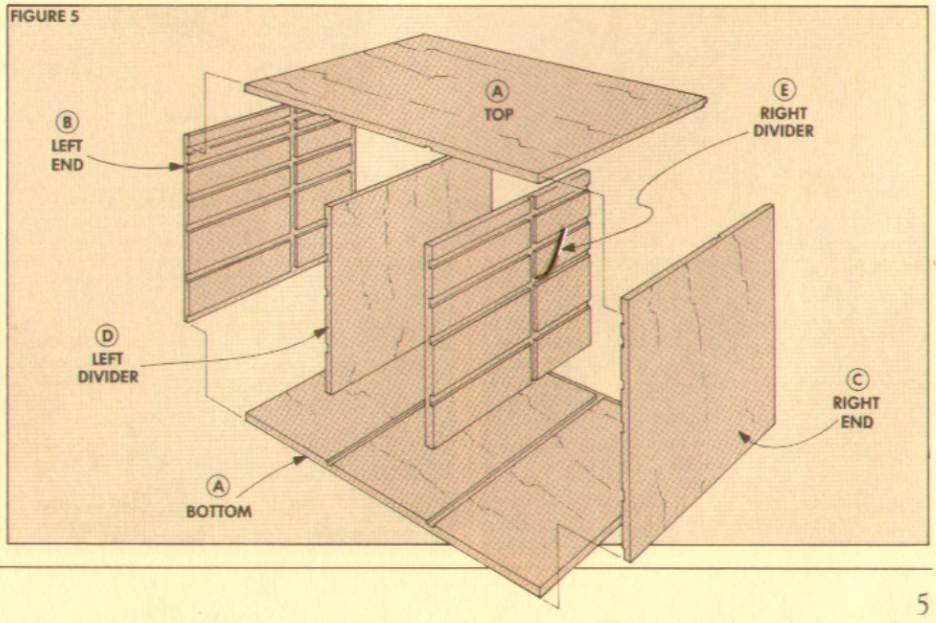

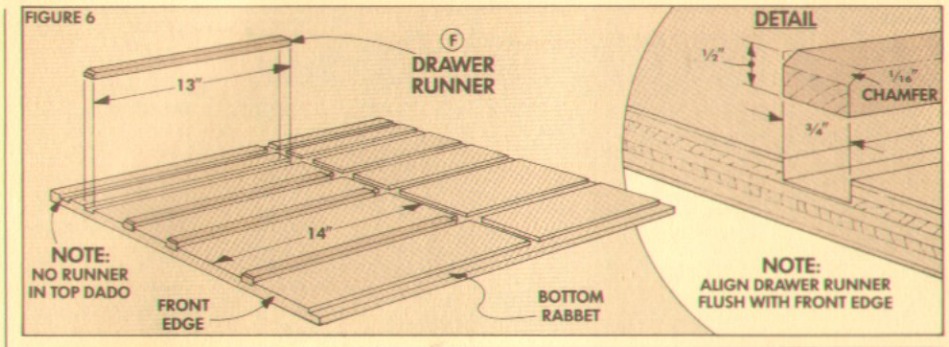

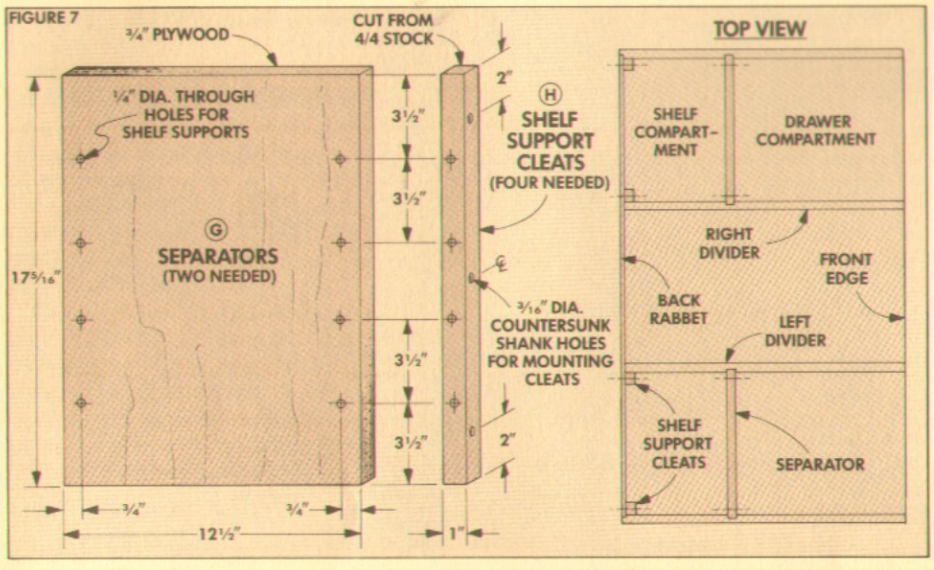

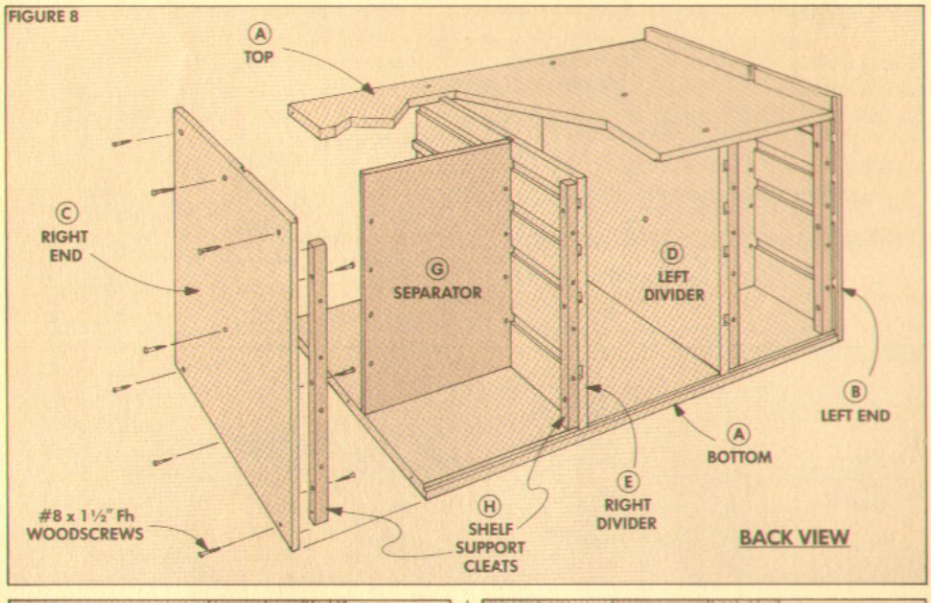

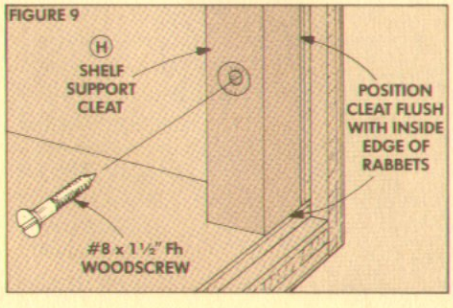

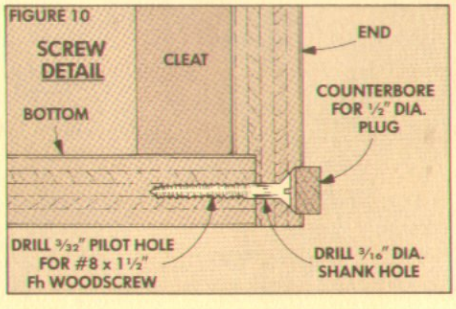

DRAWER RUNNERS

After the rabbets, dadoes, and grooves are cut in the six main pieces, work can begin on the drawer runners.

Start by cutting 16 runners (F) ½"-thick and to width to match the dadoes, see Fig. 6. To help guide the drawers into place, I sanded a slight chamfer on the front corner of each runner, see Detail in Fig. 6.

After the runners are cut to size, glue them in so the front of each runner is flush with the front edge of the end or divider.

SEPARATORS AND SHELF CLEATS

There's a separate compartment in the back of the cabinet that has space for shelves, see Top View in Fig. 7. The shelves are held up with L-shaped pin-style shelf supports, see Detail in Fig. 12.

SEPARATORS. To hold the shelf supports (and also give the cabinet rigidity), I cut ¾" plywood separators (G) to fit between the ends and dividers, see Figs. 7 and 8.

SHELF SUPPORT CLEATS. Then to hold the shelf supports at the back of the cabinet, cut four cleats (H) from 4/4 stock (13/16" actual thickness) to a width of 1" and the same length as the separators, see Fig. 7.

SUPPORT HOLES. After the separators and cleats are cut to size, drill ¼" holes for the pin-style shelf supports, see Fig. 7. To keep the holes aligned in all the pieces, I laid out the holes centered on one of the cleats and then used that cleat as a drilling guide for the other cleats and separators. (Note: Since the separators fit into ¼"-deep grooves, center the holes in the separators ¾" in from the edges.)

To make the pieces completely interchangeable (which makes assembly easier), I drilled the holes *completely* through the cleats and separators and kept the holes a uniform distance from each end.

MOUNTING HOLES. Next, to mount the cleats to the cabinet, drill three countersunk holes in each cleat, see Fig. 7.

ASSEMBLY

Once the holes are drilled, assembly can begin. To check that everything fits as it should, I started by dry assembling the entire cabinet with screws (counterboring the screw holes, see Screw Detail in Fig. 10.) Once I was sure the cabinet was square, I took out the screws and then applied glue before screwing it back together.

The procedure I used for assembly was to start by attaching the dividers (D and E) to the top and bottom aligning the *front* edges, see Fig. 8. Next, fit the separators (G) into the grooves in the dividers and glue and screw from the inside. Then attach the ends (B and C) to the top, bottom, and dividers. And finally, glue and screw in the shelf support cleats (H), see Fig. 9.

Now plug all the counterbored screw holes, see Fig. 10. (Note: See Talking Shop,

page 23, for a tip on trimming the plugs flush with the surface.)

SHELF COMPARTMENT OPENING

When the basic cabinet is assembled, openings can be cut in the ends so the shelf compartments can be reached from the sides of the cabinet, refer to Fig. 12. To get a clean opening in the plywood, there's a nifty trick using a sabre saw and a router.

Start by standing the cabinet up on end and lay out the opening with a pencil. (The opening corresponds to the inside edges of the cleat, top, bottom and separator.)

Next, drill ⅜" holes at each corner about ⅛" *inside* the penciled outline, see Fig. 11. Then rough cut the opening with a sabre saw staying about ⅛" *inside* the outline, see Sabre Saw Detail in Fig. 11.

Now comes the trick. To clean up the last ⅛", I used a flush trim router bit with a ball bearing pilot, see Sources, page 24. The pilot runs against the inside of the cleat, top, bottom, and separator while the cutter trims up the last ⅛" of plywood, see Router Detail in Fig. 11.

BACK PANEL. Next, cut the back panel (I) from a piece of ¼" Masonite to fit the back opening created by the rabbets, and nail it to the back edges of the dividers, see Fig. 12.

SHELVES. Then cut the shelves (J) from ¾" plywood to fit in the shelf compartments, see Fig. 12.

TRIM AND FILL

To cover all the plywood edges on the cabinet and shelves, rip some ¼"-thick trim strips from 4/4 stock, see Step 1 in Fig. 13. Then cut them to width to match the thickness of the plywood, Step 2 in Fig. 13.

ADD THE STRIPS. Now glue and nail the trim strips on with 1" brads and set the heads, see Fig. 14. (Note: The trim strips on the back edges of the cabinet hold in the back panel.) Finally, round over the top edges with a ⅛" round-over bit.

FILL THE GAPS. After adding the trim strips, there are a couple gaps on the inside top of the ends that should be filled. (These gaps were created when the grooves and rabbets were cut.) To fill the gaps I cut a couple pieces of scrap and glued them in place, see Fig. 14.

SAWDUST OPENING

There's one more step to complete the basic cabinet — cutting the sawdust opening in the top. This opening allows the dust and chips to collect in a plastic trash bag mounted inside the cabinet.

Cut a 10" x 13" opening 2½" from the back edge of the top and centered between the dividers (D and E), see Fig. 15. (Note: This opening will fit both the 10" Sears and Delta/Rockwell saws. For other saws, check the opening on the saw and cut a corresponding opening in the cabinet.)

FIGURE 11

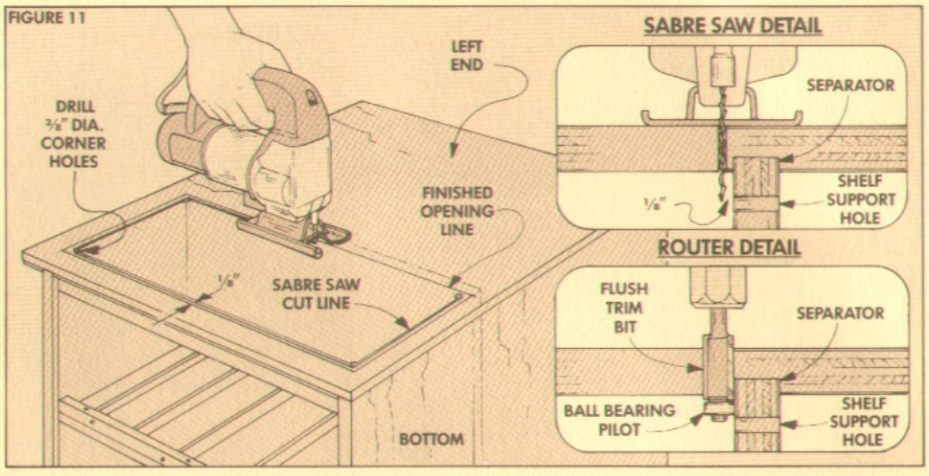

FIGURE 12

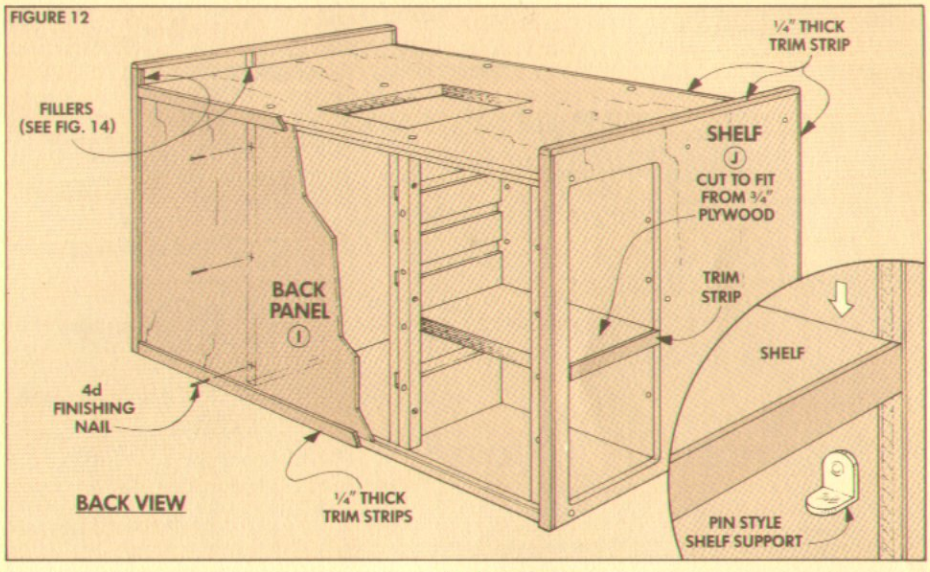

FIGURE 13

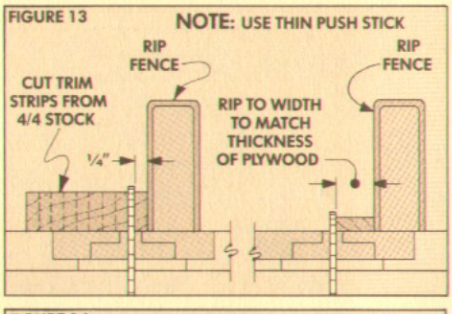

FIGURE 14

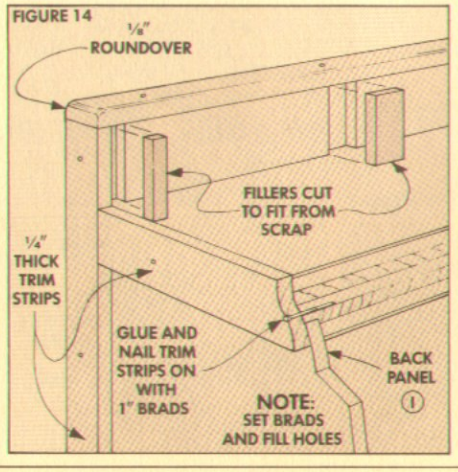

FIGURE 15

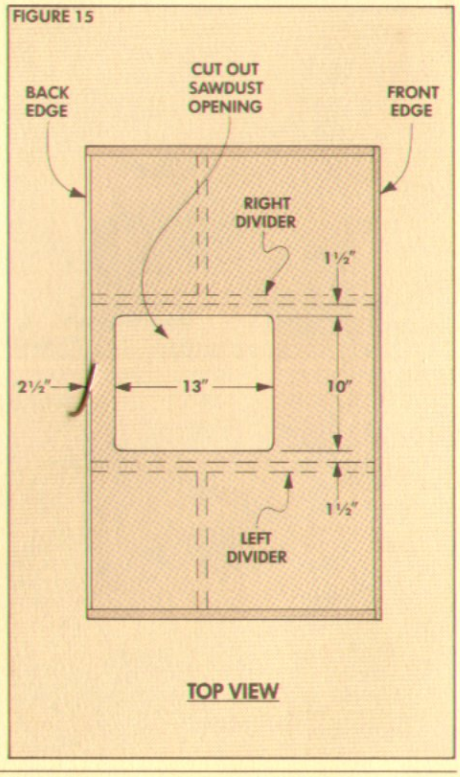

FIGURE 16

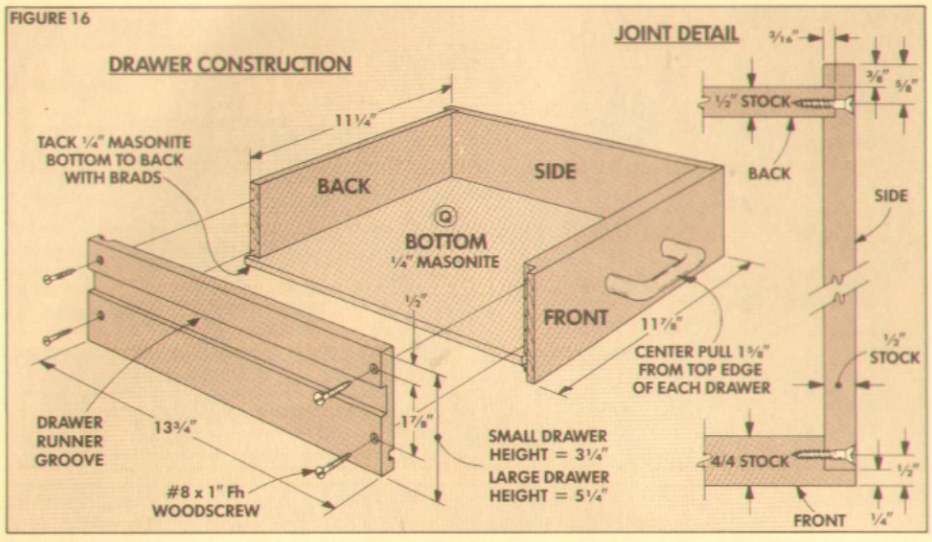

FIGURE 17

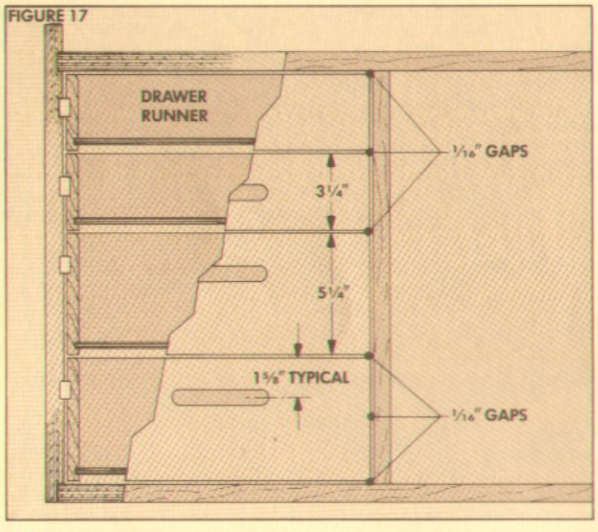

FIGURE 18

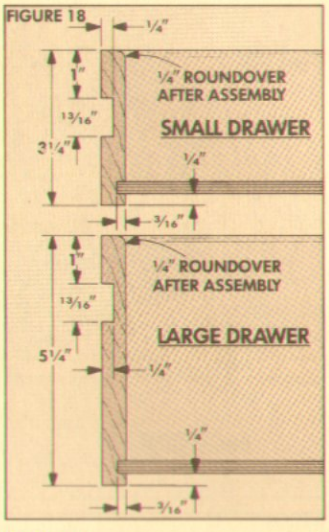

FIGURE 19

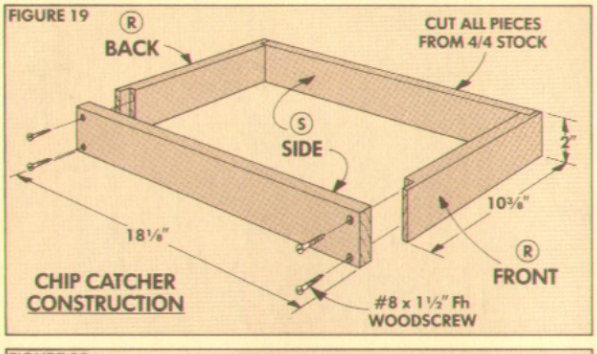

FIGURE 20

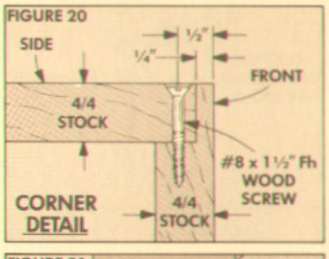

FIGURE 21

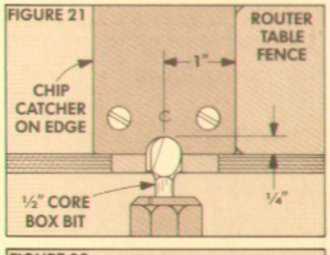

FIGURE 22

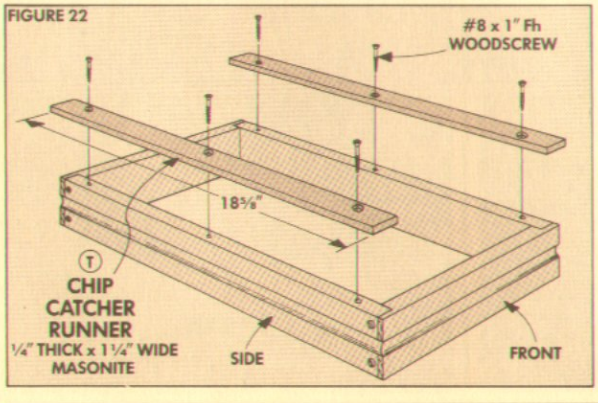

FIGURE 23

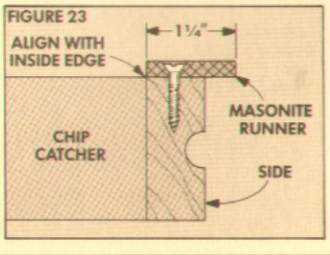

THE DRAWERS

After the cabinet is complete, the eight drawers can be built to fit the openings. There are two drawer heights, but they're both constructed the same way.

DRAWER FRONTS. Begin by cutting the fronts (K) for the four small drawers from 4/4 stock to a width of 3¼" and the fronts (L) for the four large drawers to a width of 5¼", see Fig. 16. To determine the length of all the fronts, measure the cabinet opening and subtract ⅛" to allow for a 1/16" gap on each side.

DRAWER SIDES. Next, cut eight small drawer sides (M) and eight large drawer sides (N) from ½" stock to match the width of the fronts, and cut them all to a common length of 13¾", see Fig. 16.

The drawer sides have two grooves. Cut one groove 13/16" wide on the *outside* of each drawer side for the drawer runners to slide in. Also, cut a ¼"-wide groove on the *inside* of each drawer side and drawer front to accept the ¼" bottom, see Fig. 18.

JOINTS. The drawer sides are joined to the fronts with rabbet joints that are secured with screws. Cut the rabbets on the drawer fronts to match the thickness of the drawer sides (½"), see Detail in Fig. 16.

Then to accept the drawer back, cut a ½"-wide dado on the inside of the drawer sides ⅜" from the back edge.

DRAWER BACKS. Now cut the drawer backs (O and P) from ½" stock to fit between the dadoes in the sides and wide enough to rest on top of the drawer bottoms (right at the top of the grooves).

Now clamp the drawer together and drill countersunk screw holes through the sides and into the front and back, see Fig. 16.

DRAWER BOTTOMS. Temporarily screw the drawer together, and measure and cut eight drawer bottoms (Q) from ¼" Masonite to fit in the grooves and under the back. Now assemble each drawer with glue and screws. Then slide in the bottom, and nail it to the drawer back.

When the drawer is dry, round over the inside top edges. Then mount a pull on the front of each drawer, see Fig. 16.

CHIP CATCHER

The chips and sawdust that fall through the opening in the top of the cabinet are caught in a plastic trash bag. To hold the bag (and make it easier to pull out for emptying), I built a chip catcher frame.

FRAME. Start by cutting the front/back pieces (R) from 4/4 stock to a width of 2" and a length of 10⅜", see Fig. 19. Then cut two sides (S) 2" wide and 18⅛" long.

Now cut rabbets on the front and back pieces, and screw the frame together, see Fig. 20.

KEEPER GROOVE. The trash bag is held to the frame with a large rubber band or "bungee" tie-down cord that fits in a cove

around the frame. To cut the cove, use a ½" core box bit on the router table and rout all four sides of the frame, see Fig. 21.

RUNNERS. The frame is held in the cabinet with ¼" Masonite runners (T) that ride on top of a couple cleats, refer to Fig. 25. Screw the runners down to the top edge of the frame so the inside edge is flush with the *inside* of the frame, see Figs. 22 and 23.

CLEATS. Next, cut two cleats (U) from 4/4 stock to a width of 1¼" and a length of 21". To help guide the frame into place, chamfer the top front corner of the cleats, see Cleat Detail in Fig. 25.

Now screw the cleats to the dividers 2¼" from the front of the cabinet and 5/16" down from the top, see Figs. 24 and 27.

DOOR

After I was sure the chip catcher would slide easily into the opening, I began work on the door that covers the chip catcher opening. The door is made with a pegboard panel that provides additional space to hang tools and saw blades.

STILES AND RAILS. I built the door using stub tenon and groove joinery (see *Woodsmith* No. 29 for more on making this joint). First, cut the stiles (V) from ½" stock to a width of 1¼" and ⅛" less in length than the height of the opening, see Fig. 26. Then measure the width of the opening and cut the rails (W) to length, subtracting the width of both stiles and a 1/16" gap on both sides of the door, and adding an allowance for the ¼" long stub tenons on each end. (In my case, this made the rails 10⅞" long.)

GROOVES AND TENONS. Now cut ⅛"-wide grooves (to accept the ⅛" pegboard panel) on the inside edge of each stile and rail. Then cut stub tenons on the ends of the rails to match the grooves.

PEGBOARD PANEL. After the tenons are cut, dry assemble the frame, and cut the pegboard panel (X) to size to fit in the grooves, see Fig. 26. Then glue the frame together with the panel in the grooves.

HINGE MORTISES. Once the door is glued together, cut 2"-long hinge mortises in the left stile, see Fig. 26. (Note: Mortise to a depth slightly less than the thickness of the hinge knuckle.) Then mount the hinges in the mortises, and mount the door to the inside of the opening so that the face sets back 1¼" from the front edge of the cabinet, see Fig. 27.

HANDLE AND CATCH. To complete the door add a handle (pull), and mount a magnetic catch to the divider and catch plate on the back of the door, see Fig. 27.

CASTER PADS. To hold casters to the bottom of the cabinet, I glued caster pads (Y) on each of the corners. Then I screwed the casters to the pads, see Fig. 28.

FINISHING. I finished the cabinet with three coats of Deft Clear Wood Finish, and then screwed the saw to the top with lag screws and Masonite spacers, see Fig. 29.

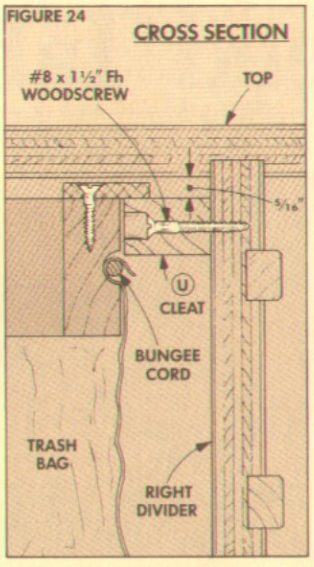

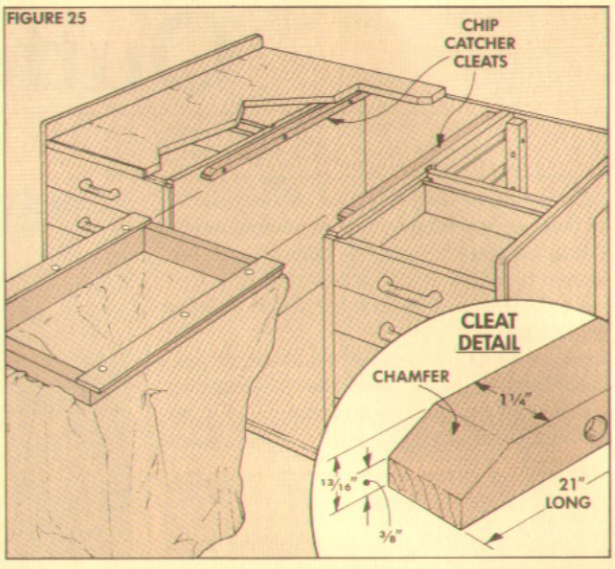

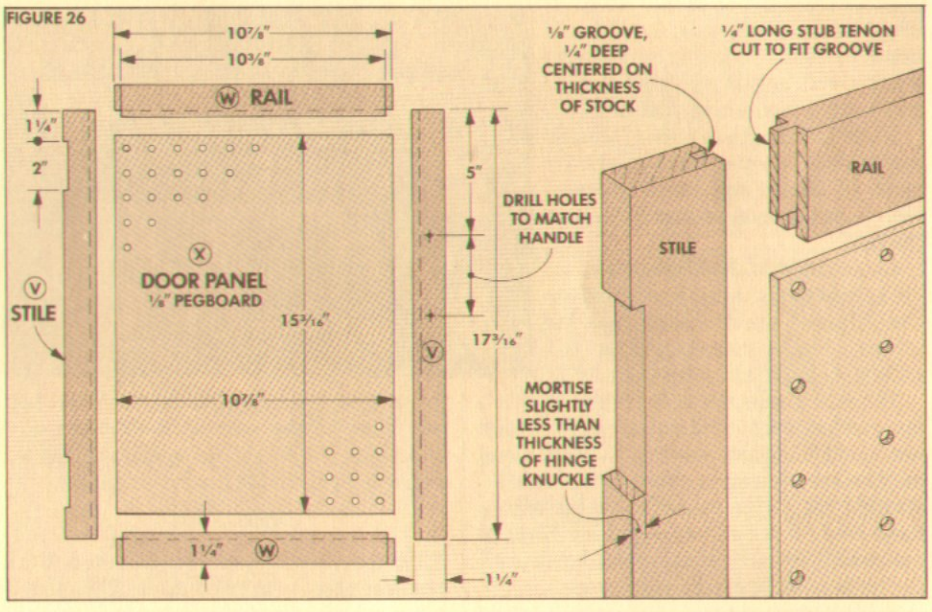

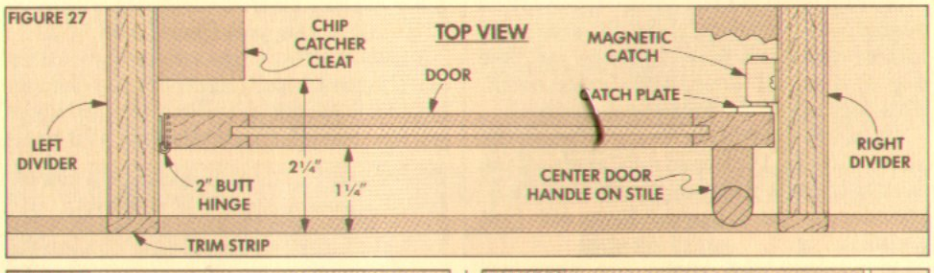

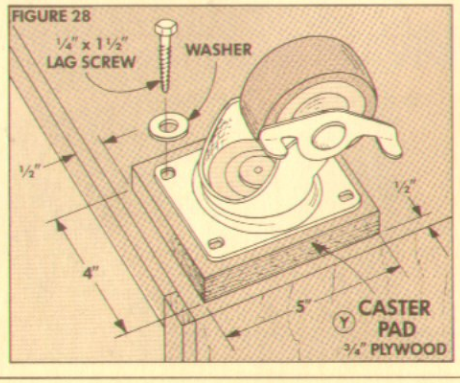

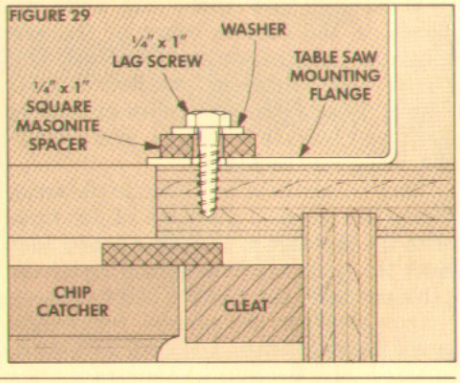

Outfeed Table

LENDING SUPPORT AS YOU FINISH A CUT

After building the table saw cabinet shown on page 4, I decided to add an outfeed table. I wanted this table to be permanently attached to the saw (not a separate unit that has to be set up each time you use it — like a roller stand).

I also wanted to be able to fold the outfeed table down so the saw could be rolled against a wall. This design does just that. (And it can be built to fit any saw, with or without the cabinet.)

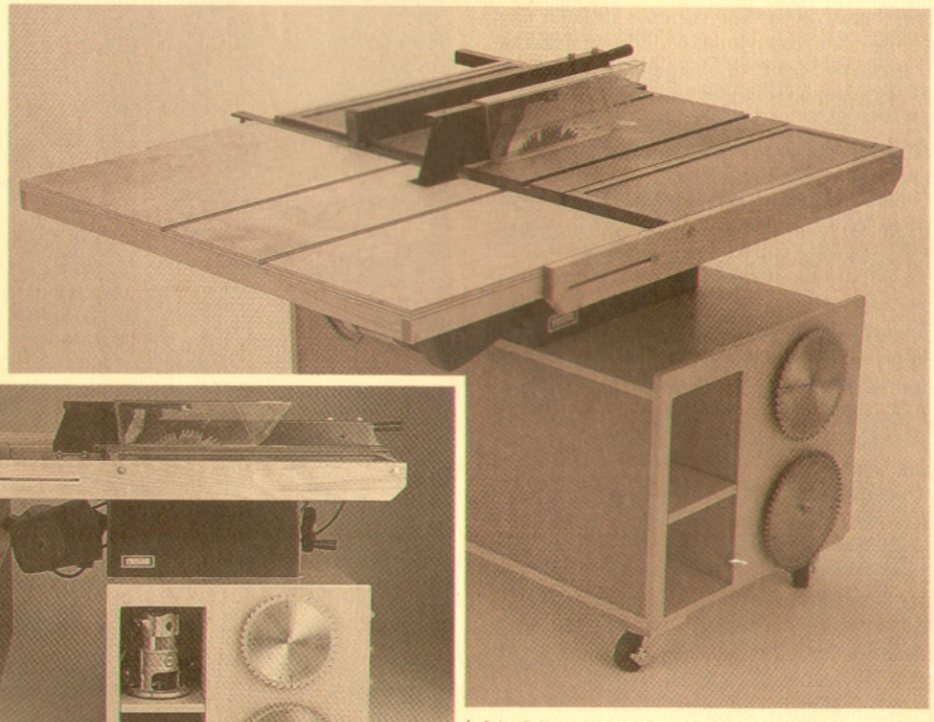

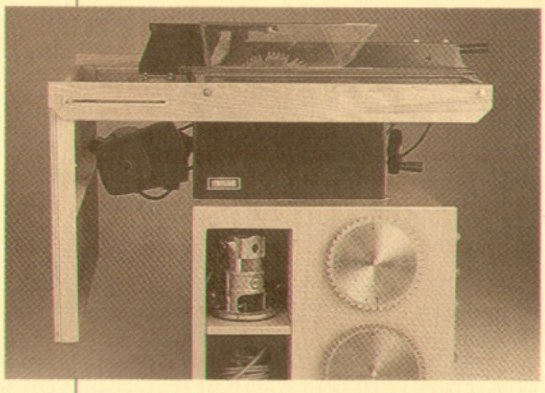

ARMS

The outfeed table is supported by two arms (A) that are attached to the extension wings of the table saw, see Fig. 1. Begin by cutting these arms from 4/4 stock (13/16" actual thickness) to a width of 3½" and a length of 40".

Note: This length assumes the table saw top is 27" deep — that's typical for most 10" Sears and Delta/Rockwell saws — so the arms project 13" behind the saw.

LAG SCREW SLOT. The outfeed table is held to the arms and pivots to the "down" position on two lag screws. These screws slide in ¼"-wide slots routed into the arms.

To make these slots, first drill two ¼"-dia. end holes centered on the width of each arm and 8½" apart, see Fig. 1. Now clean out the area between the holes with a ¼" straight bit on the router table (or with a hand-held router and edge guide). Rout in a series of passes increasing the depth until the bit cuts through the workpiece.

NOTCH FOR RAIL. After the slot is routed, cut a notch in the right arm to fit around the saw's rear rip fence rail, see Fig. 1. (I cut a 2"-deep by 2¼"-wide notch. This fits around the rails on most saws.)

TRIM OFF CORNERS. Next, to break the sharp corners, I trimmed a 45° angle off the bottom corners of the arms and routed a ⅛" chamfer on the outside edges, see Bolt Detail in Fig. 1.

ATTACHING THE ARMS. The arms are bolted to the outside edges of the saw extension wings (or the table itself if it doesn't have extensions), see Bolt Detail in Fig. 1. (Note: If the table top or extensions don't have holes in the edges, drill two ¼"-dia. holes near each end.)

Then to locate the bolt holes in the arms, clamp the arms to the edge of the table with the top edge of the arm aligned flush with the table saw top. Reach under the table and mark through the bolt holes.

Once the holes are marked, remove the arms from the saw, and drill a 5/16"-dia. (oversized) hole at each mark. Then bolt the arms to the saw with ¼" bolts, see Detail in Fig. 1. (The holes are drilled oversize to allow for final adjustment.)

THE TABLE

After the arms are securely mounted, work can begin on the outfeed table. The table is made out of a piece of ¾" plywood fastened to the top of a support frame, see Fig. 2.

PLYWOOD TOP. To determine the width of the plywood top (B), measure the distance between the arms, and cut the top about 1/16" less than this measurement so it won't bind between the arms, see Fig. 1. Then cut it to a length of 24". (Note grain direction in Fig. 2.)

MITER GAUGE SLOTS. Since the saw's miter gauge often gets pushed beyond the back of the saw, miter gauge slots have to be cut into the outfeed table. To determine the location of these slots, I clamped the plywood top into place between the arms.

Then I transferred the location of the slots to the plywood and routed the slots slightly wider than the existing saw slots.

FRAME SIDES. Next, the support frame can be built. Start by cutting two frame sides (C) to a width of 1½" and to the same length as the plywood top (24").

FIGURE 1

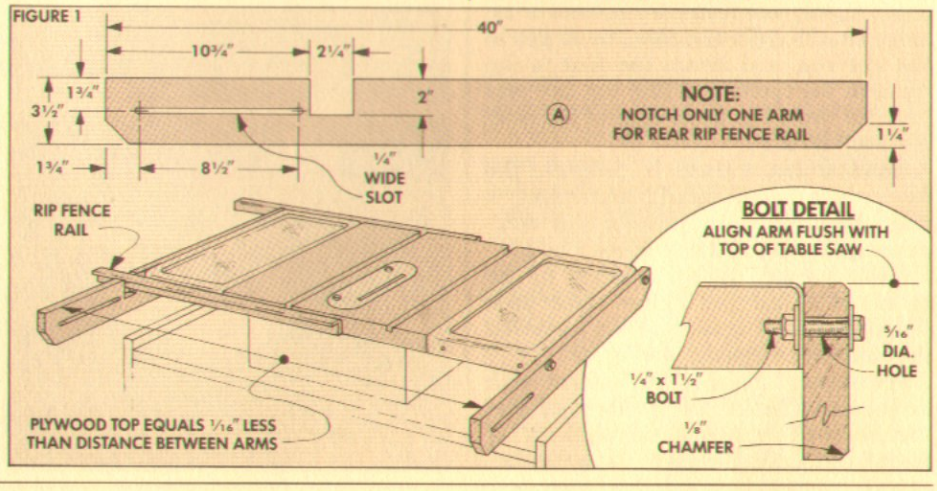

Now clamp these pieces under the plywood top flush with the edges, and drill counterbored screw holes, see Fig. 3.

STRETCHERS. After the top is screwed down to the sides, measure the distance between the sides. In my case this was 38 5/16". Then cut two stretchers (D) to this length.

Now screw one stretcher under the far end of the table and another 10½" from the near end, see Fig. 2. Finally, drill and screw through the side frames into the ends of the stretchers and plug all the screw holes, see Fig. 3.

SUPPORT BLOCKS. To add a little more strength to the pivot point on the arms, I glued a support block (E) to the front (open) end of each arm and rounded over the bottom to a ½" radius, see Detail in Fig. 2.

GLIDE RAILS

To support the table, I added glide rails (F) to the arms (A). To determine the width of these glide rails, clamp the table between the arms so the top is flush with the top edge of the arms. Then measure the distance from the bottom of the frame side (C) to the bottom of the arm, see Fig. 4. Now cut the glide rails to a length of 12" and mount them to the arms, see Fig. 5.

GUARD NOTCH. You will have to cut out a notch in the front of the table for the safety guard. The notch has to be wide enough so the guard can tip to a full 45°. For a Sears saw this means a notch about 2¼" wide and 3½" deep, see Fig. 2.

CHAMFER EDGES. After the notch is cut, rout a ⅛" chamfer around all the outside edges of the table top and frame.

ASSEMBLY

The table is connected to the arms with lag screws used as pivot pins. To locate them, clamp the table in place so the front edge is aligned with the notch in the right arm, see Fig. 6. Then drill through the front end of the slot into the frame side in two steps.

First, use a ¼" brad point bit in the ¼" slot to drill in just enough to make a centering hole, see Step 1 in Fig. 7. Then drill a pilot hole with a 3/16" bit, see Step 2. Finally, screw in a ¼" x 2" lag screw with a washer (but not too tight), see Step 3.

STOP PIN. The last step is to prevent the outfeed table from sliding out of position. Clamp the table into place with the lag screw tight against the front end of the slot. Then drill a ¼"-dia. hole up from the bottom through the glide rail and ⅜" into each of the frame sides, see Fig. 8.

Then lift up the table and glue a ½"-long dowel into the hole in the frame side, see Detail in Fig. 8.

Now the table is ready to use. To put it into the "down" position, lift up slightly (enough to lift the pin out of the hole), slide the table forward, and pivot it down.

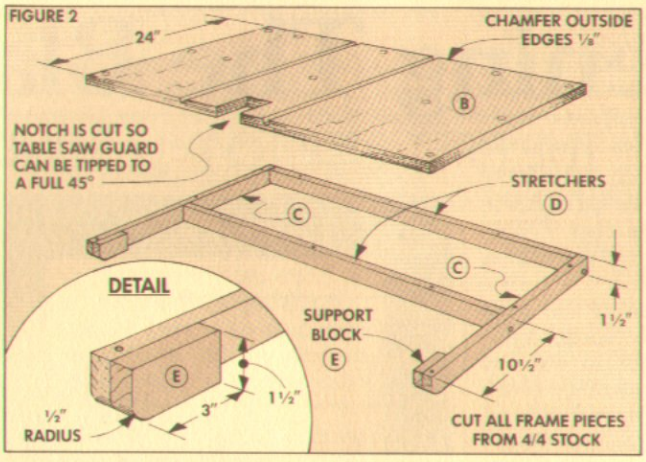

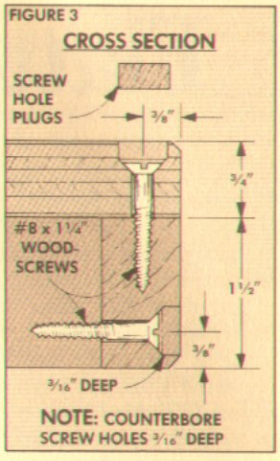

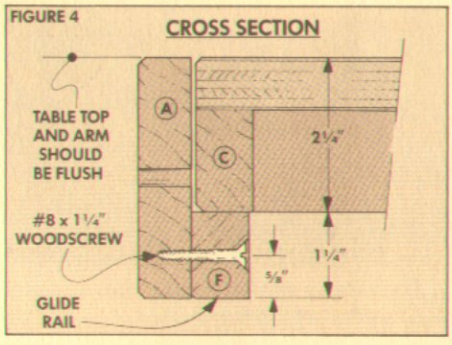

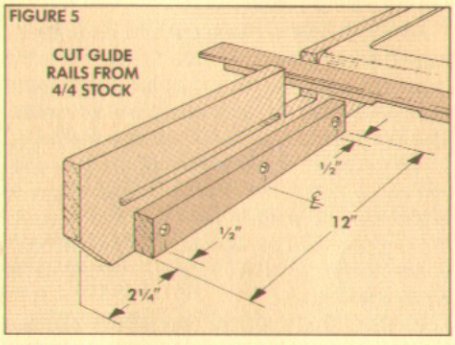

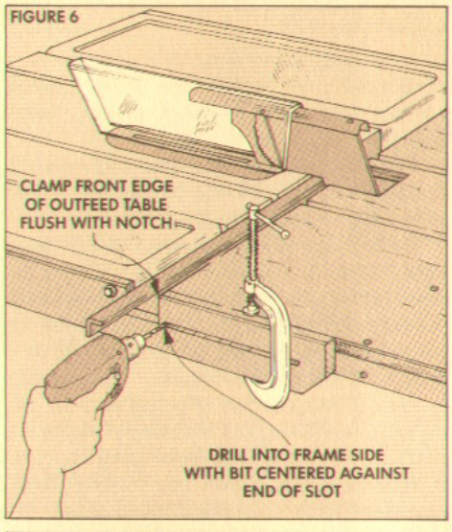

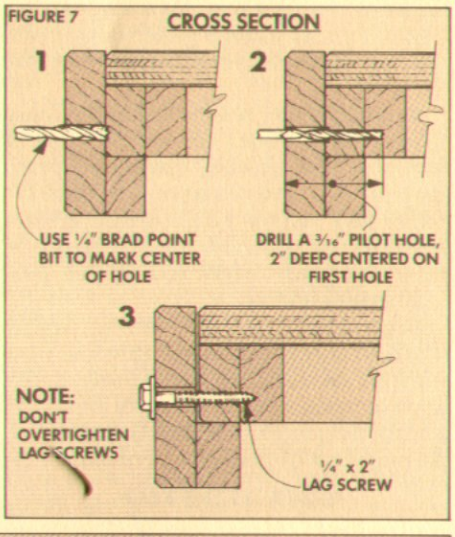

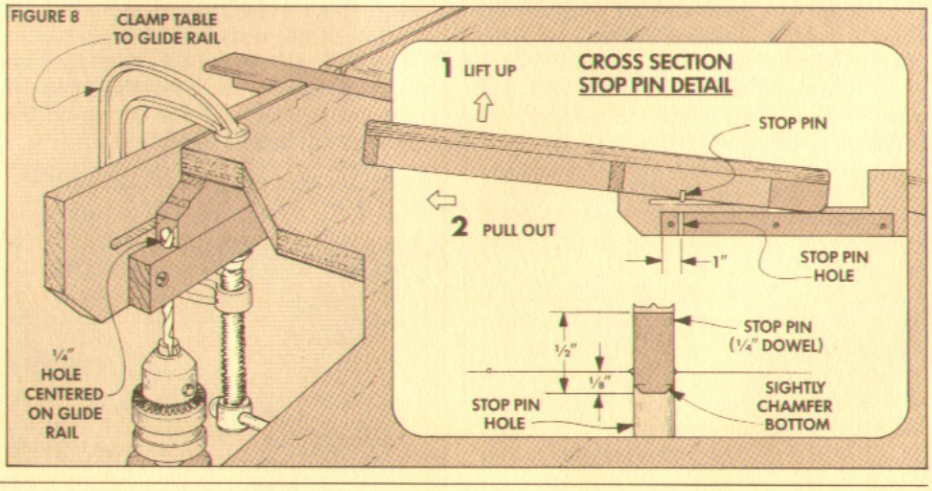

Flattening The Blade Back

THE FIRST STEP TO A LASTING EDGE

I like sharp tools. Actually, I should rephrase that slightly. I like to sharpen tools. I enjoy the sharpening process and the rewards of creating a truly fine edge.

Yet, over the years, one of the most important things I've learned about sharpening is that there are a lot of ways to approach it. In fact, I've changed my entire approach several times trying to find ways to make it easier and still produce what I consider a very sharp edge.

Although the techniques and equipment might have changed, one thing remains true. The only way to get a sharp edge is to have two flat, smooth surfaces intersect. The key here is that there are *two* surfaces.

All too often the sharpening process concentrates on the bevel of the chisel or plane blade. But no matter how flat and smooth the bevel is, the second surface — the back of the chisel or plane blade — must be of equal smoothness.

In fact, that's where the whole process begins. When I get ready to sharpen a new (or old, for that matter) plane blade, I concentrate on flattening and smoothing the back first.

Although it may seem smooth, the backs of most plane blades are usually covered with a swirl of grinding marks, see photo above. If these grooves were to remain, the ridges and valleys would create a "saw tooth" cutting edge. So, the first step is to remove all these marks and get the back truly smooth and flat.

To get the back flat and smooth, the first step is what might be called "grinding", but you don't use a grinding wheel. Instead, this involves using a coarse abrasive surface to quickly flatten the back and smooth off all the ridges left by the factory grinding.

GRINDING THE BACK

I've found two methods that work well. First is using a diamond stone. I've been using diamond stones to flatten the backs of plane blades for about four years and find them tough to beat. (For a complete review of diamond stones, see *Woodsmith* No. 24.)

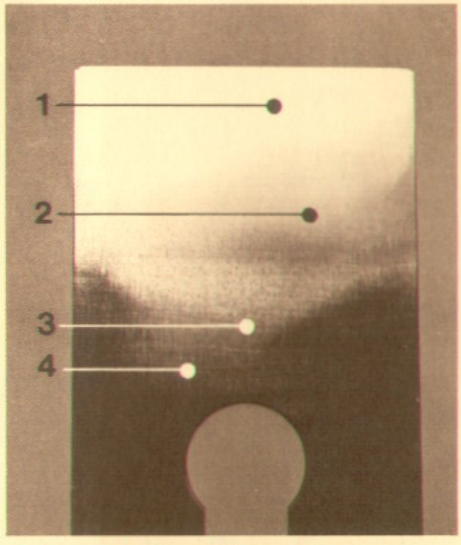

1. Polished on 6000-grit finish stone
2. Smoothed on 1000-grit stone
3. Ground on steel plate
4. Factory finish

A diamond stone is actually a plastic base with a flat steel surface. On top of this flat surface is a layer of diamond dust that's imbedded in a layer of nickel.

The only problem with diamond stones is the cost — $40 to $90 for stones in the sizes necessary to work on plane blades.

There's one other problem I should mention. Lately we've had trouble finding flat diamond stones. Because of a change in the manufacturing process, the surface of the diamond stone is not always flat. (For a source for flat diamond stones, see page 24.)

STEEL PLATE. An alternative to the modern technology of a diamond stone is a method the Japanese have used for centuries. It's just a soft steel plate that's sprinkled with silicon carbide powder.

To use the steel plate to flatten the back of a plane blade, wet the surface so it has a thin, even film of water on it. Then sprinkle a pinch of 220-grit silicon carbide powder on the plate. (See page 24 for source for steel plate and silicon carbide powder.)

Add a drop or two of water and swirl the back of the plane blade over this mixture to even it out on the steel plate. Now you have to work.

Place the back of the plane blade flat on the steel plate and press down directly behind the bevel with both hands, see Fig. 1. Press down hard and stroke the blade from one end of the plate to the other.

Really bear down. The idea is to cut the steel, not just make grating noises.

THE SECRET. But if you're pushing down so hard, why doesn't the silicon carbide just hollow out the steel plate?

This seems like a logical question because the plate is much softer than the blade. But the softness of the plate is what makes the whole system work.

What happens is that the sharp points of the silicon carbide become imbedded in the relatively soft surface of the plate. They stay in position just like the diamond particles imbedded in the surface on the diamond stone, see Fig. 2.

CHECK PROGRESS. As grinding progresses, a shiny suface will begin to grow across the back of the blade, see photo. When this surface extends from one edge of the blade to the other, the back is flat.

KILL CORNERS. Before moving on to smooth this surface, there's one more little step I do at this point. I "kill" the corners to minimize the tiny ridges that always seem to appear on a piece of wood where the planing strokes overlap.

To kill the corners, hold the blade at about a 45° angle to the surface, and drag the corner over the surface, see Fig. 3. The idea is to eliminate the sharp point, not create a really visible chamfer. Just a few strokes on each corner is enough.

POLISH THE BACK

After the back has been "ground" flat, the Japanese continue working the blade in the silicon carbide paste until it's almost dry. What happens is that the particles break down smaller and smaller. Finally, they're so small they leave the surface mirror-polished.

FIGURE 1

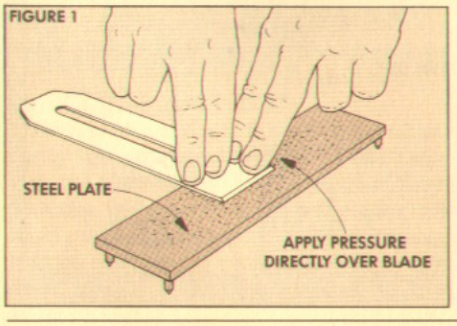

FIGURE 2

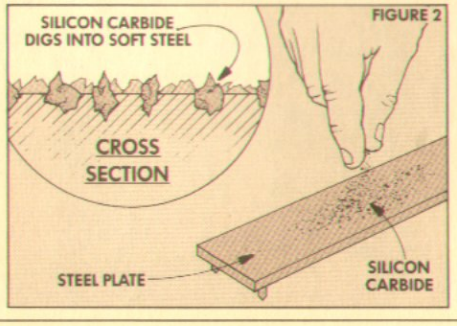

FIGURE 3

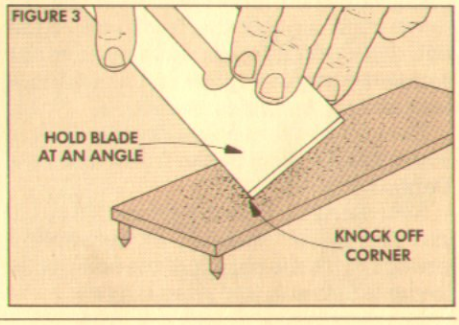

I don't go to this much effort. When I can see the back is flat, I move on to a 1000-grit Japanese waterstone.

Once again, this is a change from the way I used to work. I used to use Arkansas (oil) stones. But I've become a champion of waterstones.

WATERSTONES. After using waterstones for more than four years, I can't imagine going back to using oilstones for sharpening plane blades and chisels.

Why do I like waterstones? First, they cut faster. This is mostly because there's almost no chance for the surface to glaze as oilstones do. The binder that holds the abrasive particles together in waterstones gives way at just the right rate to always yield a fresh surface.

Another reason I like waterstones is that they come in grades finer than oilstones (up to 8000 grit) that give an incredibly smooth surface.

SMOOTH THE BACK. Now back to smoothing the back of the plane blade. I do this in two steps on waterstones. First I refine the surface on a 1000-grit waterstone.

Here I repeat the stroking action used when grinding, but don't bear down quite as hard. As you start on this stone, continue to sprinkle water on the surface to thin out the "slurry" that builds up on the surface. (I use a spray bottle.)

The object here is to keep rubbing the back on a fresh cutting surface of the waterstone until the surface takes on an even patina.

Then look carefully at the surface to make certain all the grinding scratches are gone. This is important because each scratch left will become a microscopic nick where it meets the edge.

When the surface is free of all scratches, I begin to refine it by allowing the "slurry" to build up and dry out a bit. (Keep it just moist enough so it doesn't "chunk" up.) The slurry is actually broken fragments of the waterstone that get finer and finer as they're rubbed. The finer they get, the smoother the surface gets.

POLISHING. For a truly smooth surface, I use a 6000-grit waterstone with the same procedure as on the 1000-grit stone.

It's easy to tell when you're done. The back will have a mirror finish. Don't accept any wavyness. If you see any scratches or wavyness in the reflection, go back to the 1000-grit stone and flatten it out again.

This sounds like a lot of work, but the whole process is necessary only once in the life of the blade. It's worth doing right.

REPLACEMENT BLADES ... *buying better steel*

Flattening the back of a plane blade is hard work, but it's necessary if you want a truly sharp edge.

One lesson I've learned from all this hard labor is if I'm going to work up a sweat perfecting the back of the plane blade, I'm going to do it on the best blade I can buy.

The question is, how can you determine quality without a lot of extravagant metal-testing equipment?

There is one method that will give you a good idea of the quality of the steel in the plane blade. You can "read the burr."

READ THE BURR. While smoothing the back of the plane blade, the burr indicates what kind of edge I can expect as a reward for my sharpening efforts.

The burr is the last layer of steel that resists being abraded by the waterstone. What happens is this. While the back of the blade is rubbed over the surface of the waterstone, the steel above keeps the lower level in position as it's abraded away.

If the steel is soft, this layer will be pushed up and bend away from the abrasive surface. As this happens a burr is formed at the cutting edge. This burr will bend toward the bevel. Then as the bevel is honed (see page 16) it will bend back.

On the other hand, if the steel is hard, this last, very thin layer will stick straight out and be abraded until it's microscopically thin. Then as the bevel is honed, this thin burr will snap off. (It looks like fragments of a thin wire on the surface of the waterstone.) This indicates the blade is hard enough to take a keen edge.

As I've worked with different plane blades, I've come to appreciate two blades (sold as "replacement" blades) for planes.

REPLACEMENT BLADES

Several years ago I bought a Japanese laminated steel blade to replace the blade that came on my Record 05 jack plane. It transformed the plane from a good tool into a woodworking wonder, see Sources, page 24.

On a laminated blade, the cutting edge is a thin piece of high-carbon steel forge-welded to a body of soft steel. This high-carbon steel edge will take and hold what I consider the ultimate edge.

I was so impressed with the laminated blade that I set out to replace the factory blades in all my planes. Unfortunately, these blades are available in just 2" and 2⅜" widths. That covers most bench planes. But, for specialty planes I was out of luck.

SOLID HIGH-CARBON BLADES. Recently, my luck changed. Ron Hock, a knife maker in Fort Bragg, California offers a complete line of solid, high-carbon steel blades to fit almost every plane and spokeshave on the market, and he'll custom make blades for antiques. (I used one of Hock's blades for the wooden plane shown on page 18.)

These blades are made entirely of the same basic steel as the edge on the laminated blades, so they perform with the same high quality, see Sources, page 24.

HIGH CARBON STEEL

What is it about these high-carbon steel blades that make them capable of taking and holding a good edge?

According to Ron Hock, it's not so much what's in the steel. It's what's left out.

"There are three qualities that make a tool steel suitable for making blades," Hock told me. "These are edge-holding ability, sharpenability, and rust resistance.

"For metallurgical reasons, you can have only two of the three qualities. So on the blades I make for woodworking, I think the two most important qualities are a long-lasting edge that can be easily sharpened."

A long-lasting edge is dependent on the steel's hardness. It's the carbon content in the steel that determines its ability to harden with heat treatment. That hardness gives an edge the ability to stay sharp under mild abrasive pressure (wear). So, the harder the steel, the longer it holds an edge.

"But, there's a trade-off," Hock explained. "Really hard steel is as brittle as glass. To reduce this brittleness, the steel is tempered. Unfortunately, reducing the blade's hardness also lowers its wear-resistance. So, a balance must be struck to make the blade hard enough to hold an edge, but not so hard it will break while planing or be difficult to sharpen."

Hock tempers his blades so they take a keener edge than the standard blades that come with most new (or old) planes. But, Hock's blades are not so hard that they're difficult to sharpen or chip in use.

There is one other characteristic of Hock's blades that takes a little getting used to. They will rust.

"I don't include rust-resisting elements in the steel for the plane blades." says Hock. "Most plane manufacturers make blades to satisfy the guy who just uses his plane occasionally. So they add other elements to the steel to prevent rust."

For instance, chromium is added to make the blade alloy stainless steel. But, chromium has two negative characteristics. First, it's extremely hard, so it makes a blade that's harder to sharpen.

Second, chromium crystals are much larger than those of high-carbon steel. That means there will be "lumps" in the honed edge that will keep the edge from being as fine as it could be.

The trade-off with with Hock's high-carbon blades is that they require more care. (Give them a squirt of WD-40 from time to time.) Even if they do look a little rusty, they take an incredibly keen edge that cuts like nothing I've used before.

Bevel Honing Guides

The toughest part of sharpening a plane blade (or chisel) is holding the blade at the same angle through the grinding and honing process. It's possible to do this by hand, but a sharpening jig makes it a lot easier.

A LOOK AT FOUR JIGS

All blade sharpening jigs work on the same principle. They grip the blade so two measurements remain constant during the honing process. These measurements are: 1) the distance the blade projects from the jig, and 2) the height of the blade over the stone. These two dimensions set and hold the sharpening angle. However, the method used to accomplish this varies from jig to jig.

The four jigs shown in the photo at right are relatively inexpensive (all cost less than $25), and it's easy to assume they all work the same. But, there's actually quite a bit of difference among them. To establish a basis for comparing these jigs, I've listed six characteristics that are critical to performance. Then, I graded each jig on a scale of 1 to 10, see Chart.

1. HOLDS SECURELY. A jig has to hold the blade in place. If the blade slips forward or back, the sharpening angle (bevel) will change. If the blade twists sideways, the cutting edge will be out of square.

2. SETS UP SQUARE. A blade must be held square in the jig to produce a square cutting edge. The score in this category is based on how easily the blade can be positioned squarely in the jig while the gripping mechanism is tightened.

3. MAINTAINS ANGLE. Once the blade is locked in the jig, the jig should be able to be moved from coarser to finer stones without changing the sharpening angle.

4. EASY TO RESET. For the jig to function as a honing guide, it should be easy to reset to the original sharpening angle or change to a microbevel angle setting.

5. DOESN'T MAR SURFACE. The jig should grip securely without leaving dents or burrs on the blade. This is not just a cosmetic consideration. Dents and burrs on the blade can bind the plane adjustment mechanism.

6. WORKS WITH CHISELS. The jig should work as well with chisels as it does with plane blades. (For details on this category, see Box opposite.)

SHARPENING STONES. There's one other item to mention about these jigs. They all work on either Arkansas (oil) stones or Japanese water stones.

JIGS TESTED. The four jigs tested are those most commonly available in hardware stores and mail order catalogs, see Sources, page 24. Others are available, but these represent basic holding methods.

	ECLIPSE	STANLEY	LEE VALLEY	GENERAL
Holds Securely	10	8	6	8
Sets Up Square	9	5	6	4
Maintains Angle	9	8	8	1
Easy To Reset	8	7	7	3
Doesn't Mar Surface	10	8	5	8
Use With Chisels	9	9	4	3
TOTAL	9.2	7.5	6.0	4.5

The Eclipse 36 jig (A in photo) is the most compact and least expensive of all the jigs tested. And it works better than any other we've used in the shop.

FEATURES. The key feature of the Eclipse is the way it holds the blade in place, see Fig. 1. First, it holds a plane blade very securely. This is because the locking mechanism consists of two opposing "vise jaws" that ride on a threaded shaft and squeeze together on the sides of the blade when the locking knob is twisted.

More important, however, is that the jaws of this miniature vise are not mirror images of one another. Instead one is a straight jaw and the other is a convex curved jaw. The effect of this design is that the curved surface presses on the side of the blade forcing the opposite side of the blade against the straight jaw. The result is

FIGURE 1

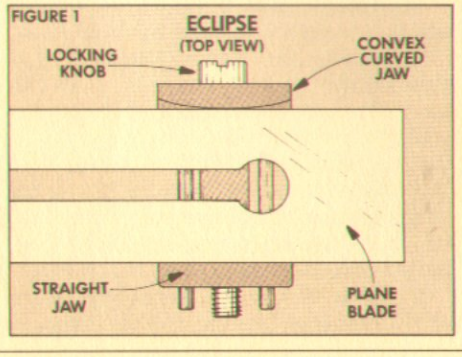

FIGURE 2

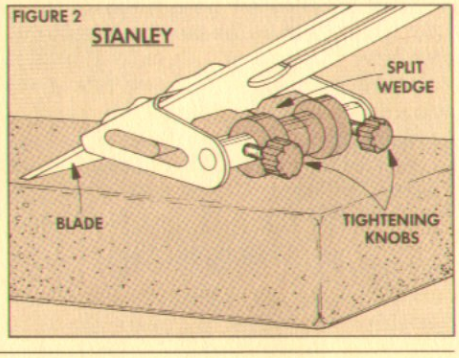

that the blade is automatically aligned square every time.

LIMITATIONS. The only limitation of the Eclipse is that it won't work with blades shorter than 3". This is because the blade has to project 2" from the front of the jig to establish a 25° sharpening angle and the clamping mechanism needs at least 1" of blade for a secure grip.

This means the Eclipse won't work with Japanese chisels (which have short blades) or spokeshave blades. But, it works perfectly with all western chisels and plane blades.

STANLEY

The Stanley jig (B in photo) looks more like a gadget than a precision honing aid, see Fig. 2. But it does work pretty well.

FEATURES. The strong point of this jig is that it's designed to press the back of the blade against the top of the jig. (The importance of this is discussed in the Box below.) Also, the roller on the Stanley is positioned behind (instead of beneath) the support seat. This design has two very positive effects.

First, the rear-mounted roller forces pressure down over the blade edge. This is critical when honing an edge (see Fig. 4, page 17). Second, the rear-mounted roller allows sharpening very short blades, which means the Stanley jig can be used with Japanese chisels and spokeshave blades.

LIMITATIONS. On the negative side, the blade gripping mechanism on the Stanley jig requires tightening two knobs separately. This design is helpful when working with chisels, see Box. But, holding a blade so it projects the right distance and remains square while getting both knobs locked in place is difficult. The same problem occurs when trying to reset the blade for a microbevel.

LEE VALLEY

The Lee Valley honing guide (C in photo) is delightful to look at and handle — it's made of anodized aluminum, steel, and bronze, and feels good in the hand.

FEATURES. The best part of this guide is the roller mechanism, see Fig. 3. First, the axle is set just beneath the blade support platform that holds the blade in place. This allows the tool to be used to hone very short blades like Japanese chisels and spokeshave blades.

The second outstanding feature of the roller is that its axle is actually an adjustable cam. This means that to fine-tune the angle or reset for a microbevel all you have to do is twist a knob to change the angle in 1° increments.

LIMITATIONS. However, this jig's performance isn't on par with its appearance. When tightening the screw that holds the blade in place, it's difficult to set the blade

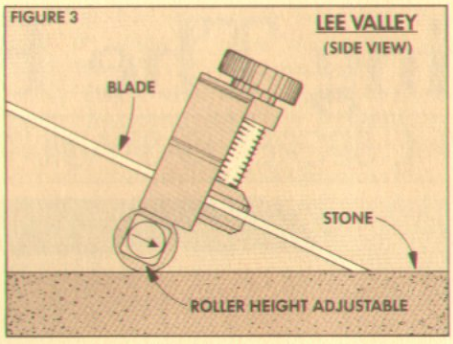

square, centered, and projecting the right amount. Also, this jig is designed so the screw presses the top face of the blade down on the support platform, which makes it a poor choice for chisels, see Box.

GENERAL

The General (D in photo) is radically different from the other jigs tested. It has an outboard roller that rides on the workbench surface about 8" behind the edge of the blade, rather than on the stone, see Fig. 4.

FEATURES. Since the roller rides on the workbench rather than the stone, the entire length of the stone can be used while sharpening. This lessens the tendency to dish out the center of the stone.

LIMITATIONS. But this roller design becomes a liability that outweighs its assets. I like to work on a series of three stones to hone a bevel. For this jig to work properly,

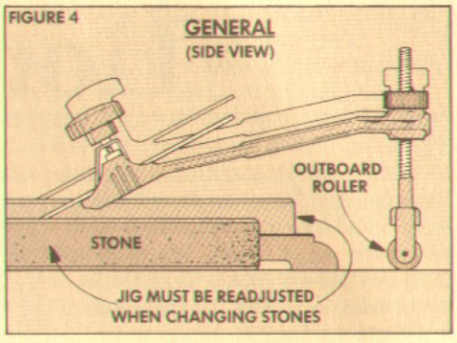

all three stones have to be exactly the same height above the workbench — otherwise the angle will change when moving from one stone to the next. Although it can be reset between stones, it's time consuming and difficult to reset to get the exact angle as changes are made.

THE FINAL CHOICE

Of this group, the Eclipse jig is the clear winner. If plane blades and western chisels were all I ever sharpened, I can't imagine needing a different jig.

But, I do appreciate having a jig that will handle Japanese chisels and the occasional job of sharpening a spokeshave blade. For these jobs the Stanley jig is the best choice.

Since neither of these two jigs solves all sharpening problems, I suppose I'd buy the one that fits most of my needs. Then, I'd add the other to my sharpening kit later.

GRIPPING A CHISEL

Of the four jigs evaluated here, two have a basic design flaw. This flaw makes them inaccurate for sharpening chisels.

The problem has to do with the basic principle of how the edge of a chisel gets sharp. A sharp edge is the intersection of two surfaces — the bevel and the back of the chisel. The design flaw is that some jigs clamp the top face of the chisel *down* against a surface on the jig that's parallel to the stone, see Detail A.

Okay, so what's the big problem? This clamping design fails simply because some chisels aren't made the way they're supposed to be made. After chisels are forged, they're ground to final shape. During this grinding process the back and top faces rarely come out parallel — in cross section, the two faces are angled.

If the honing jig works off the top face, the bevel will be honed at an angle to the back. As a result, the edge will be skewed.

The solution is to design the jig so the clamping mechanism presses the back of the chisel *up* against a surface parallel to the stone, see Detail B. This is what the Stanley and Eclipse jigs have done. But they do it in different ways.

STANLEY. On the Stanley jig, a wedge pinches the blade up against the body of the jig to compensate for the lack of blade surface parallelism.

ECLIPSE. The Eclipse jig solves the problem differently. The sides of the "jaws" slope outward toward the top. So, when the jaws are tightened, the back of the chisel is forced to the top of the jig so it's parallel to the stone, see Detail B.

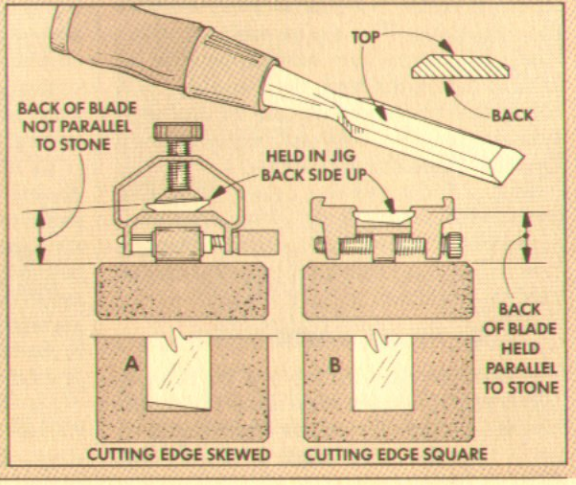

Honing The Bevel

THE SECRET IS STABILITY

Sharpening a plane blade is pretty easy, at least in principle. There are two basic steps. First, the back is flattened and smoothed. Then the beveled edge is ground to the cutting angle you want and it's honed smooth.

Working the back smooth and flat is relatively straight-forward, although it does require some elbow grease, see the article on page 12. But forming and honing the bevel is another story. The problem is that through the entire process of grinding the angle and then honing it smooth, the blade must be kept at exactly the same angle — on every stroke.

No matter what technique is used, the goal is the same: to remove metal to produce a smooth, flat surface on the bevel that intersects with the smooth, flat surface of the back.

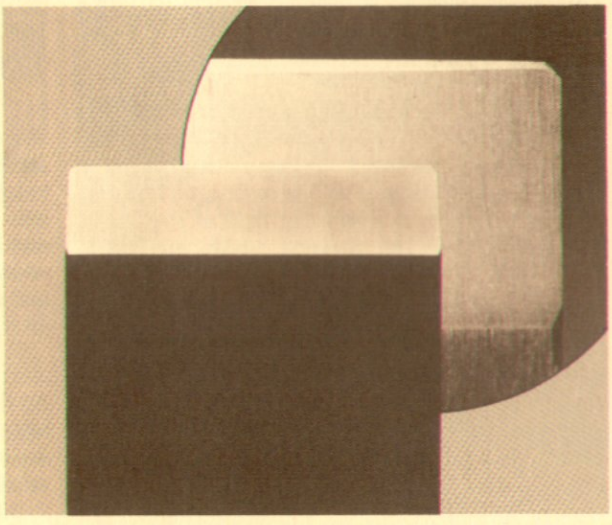

GRINDING THE BEVEL

This whole procedure starts with grinding the bevel to the cutting angle you want. I usually use a grinding wheel to establish the sharpening angle and hollow grind the bevel on chisels and planes blades (see *Woodsmith* Nos. 20 and 23).

When the bevel is hollow-ground, I find it easy to hold the blade (without a jig) so just the toe and the heel contact the stone. With just these two points resting on the stone, the blade won't rock during honing, so the sharpening (bevel) angle can be maintained on each stroke.

But, what if you don't have a grinder to hollow-grind the bevel? No problem. By using a honing jig (see page 14) the plane blade can be kept at the same angle through the entire process of shaping and honing on a series of stones.

Note: I like to use a series of three stones for this process. 1) A coarse or extra-coarse diamond stone. (This can be replaced with a steel plate and silicon carbide powder, as used to flatten the back, see page 12.) 2) A 1000-grit Japanese waterstone for the initial honing. And 3) a 6000-grit waterstone to form and polish the microbevel.

Also, I like to use the Eclipse 35 honing guide (which is the one shown in the art used to illustrate this article). But the Stanley and Lee Valley jigs (shown on page 14) can be used the same way.

SET THE SHARPNESS ANGLE

The first step in forming the bevel is to decide what the bevel angle should be. While this can be a topic for endless discussion, I've found that the exact angle is not all that critical. I usually grind and hone the bevel to about 25°, and then add a micro-bevel at about 30°.

SETTING THE ANGLE. Setting up the honing guide to this angle is the first problem. Basically, the angle is determined by the distance the blade projects from the front of the jig, see Fig. 1.

On the Eclipse jig, if the blade projects 2" from the front edge of the jig the angle will be 25°. Resetting the blade so the projection is 1½" establishes the microbevel angle of 30°. So every 1/10" change means a 1° change in the angle.

For the Stanley, the blade must project 1" for a 25° angle, and ½" for 30°. For the Lee Valley jig an accessory is available for setting the angle, see Sources, page 24. (But if you want to measure, use 1½" for 25° and 1" for a 30° angle.)

BLADE SETTING JIG. It would be nice if you could set the angle once and not worry about it during the whole process of shaping and honing the bevel. But something always seems to happen — the blade slips or you need to take it out to check if it's square. To make certain I can return to the same angle each time, I use a simple blade setting jig, see Fig. 2.

To make this jig, glue two strips of Masonite at 90° angles to each other to a piece of scrap plywood, see Fig. 2. The strip parallel to the edge of the scrap acts a positive "stop" so the blade will always be reset to the same projection. The strip perpendicular to the edge aligns the blade in the honing jig so the cutting edge will be ground square.

For the Eclipse jig, the distance between the edge of the plywood and the strip is 2" for a 25° grinding angle. (I added another pair of strips to set the blade 1½" for a 30° microbevel.)

GRINDING THE BEVEL

After the blade is locked at the correct angle, the bevel can be formed. One of the fastest ways to "grind" this angle is on a coarse or extra-coarse diamond stone (see Sources, page 24). Or you can use the steel plate and silicon carbide powder used to flatten the back (see page 12).

There are a few tips for using a honing guide for grinding the bevel. For maximum control, I place my thumbs behind the jig and press my fingertips down on the back of the blade right over the edge, see Fig. 3. (Don't press down over the wheel.)

When "grinding" on the diamond stone or the steel plate, I apply pressure on the forward stroke only, releasing pressure while backing up. I try to imagine I'm peeling a label off the stone to get the cutting action that works best.

CHECK FOR SQUARE. As the bevel is ground, the edge must be square. In order to check for square, you might have to take the blade out of the jig. (Resetting it after it's checked is when the blade setting jig shown in Fig. 2 comes in handy.)

If the blade is being ground out of square, press harder on the "long" corner, see Fig. 3. Keep grinding until there's an even matte surface from heel to toe of the bevel. This means you're getting the surface flat.

To make sure the cutting edge has been ground straight, check for an even burr on the back (flat side). This burr is formed as the surface of the bevel is ground down and intersects with the surface of the back. As these two surfaces meet, a thin "flake" of metal curls up on the back edge to form a burr.

Use the pad of your finger to feel for the burr along the back of the blade. Don't pull your finger along the edge. Instead, pull it at 90° to the edge, see Fig. 5.

You know if the edge is out of square if the burr is heavier on one end than the other. Keep "grinding" until the burr is even across the back of the blade.

REMOVE BURR. Then the burr must be removed. Don't try to pull or break the burr off. As it "tears" loose, it will leave a ragged edge on the edge of the blade. Instead, rub the burr off.

I use only the finishing (6000-grit) waterstone to rub off the burr, see Fig. 6. (The back has already been polished to a

mirror finish, so you don't want to go down to a coarser stone at this point just to remove the burr. Refer to page 12 for the sequence in smoothing the back with the finishing stone.)

To rub off the burr, place the back of the blade flat on the finishing stone. Now apply pressure directly over the edge and stroke the blade back and forth so the cutting edge remains parallel to the sides of the stone. The burr will come off in five or six strokes. (It will look like fragments of a very thin wire on top of the stone.)

SMOOTH THE BEVEL

After the bevel is ground and the burr removed, the honing process can begin to smooth the surface of the bevel. Here, I use a two-step process on a 1000-grit stone.

INITIAL SMOOTHING. First, I go through a process of initial smoothing to remove the scratches left by "grinding", see Fig. 4.

To remove the scratches quickly, use lots of water on the 1000-grit waterstone to rinse away the "slurry" frequently. This keeps the bevel in contact with the fresh abrasive particles on the surface.

Hone until the bevel has a uniform dullness (that looks like pewter), and feel for an even burr on the back. Then remove the burr on the finishing (6000-grit) stone.

FINAL SMOOTHING. The second part of this process is to do a final smoothing on the 1000-grit stone. This is the same as the first step, just don't rinse the stone. Instead, let a "slurry" of particles collect on the surface of the stone as you hone.

This "slurry" is sort of a mud made up of broken fragments from the waterstone. Since these fragments are small, they produce a finer finish than working on a clean, freshly-rinsed waterstone.

Shop Note: As the slurry builds up on the surface of the stone, it may stick to the wheel on the honing jig. Check it every once in a while and wipe it off.

When there is a thin, even burr from edge to edge on the back of the blade, remove it by again polishing the back on the 6000-grit stone.

THE MICROBEVEL

At this point, the blade is sharp enough for almost any purpose. But it you want a super-keen edge, you can add a microbevel. A microbevel is just what the name implies. It's a tiny, secondary bevel that starts out no wider than a hair on the edge of the main bevel, see Photo.

SET FOR MICROBEVEL. To set the jig for the microbevel, loosen the clamping mechanism on the jig. Next press the blade edge against the Masonite strip that's closer to the edge of the plywood base, see Figs. 1 and 2. Then slide the honing jig along the blade until it contacts the plywood base and tighten the clamping mechanism. This increases the angle to about 30°. (On the Eclipse jig, this means reducing the amount the blade projects to 1½".)

HONE THE MICROBEVEL. Honing the microbevel is the quickest and most satisfying part of the whole sharpening process. Sprinkle some water on a 6000-grit finish stone and place the blade on top. Now bear down on the leading edge of the blade and make five or six forward strokes. Then look at the edge.

The edge should have a shiny hairline strip at the end of the bevel. If this strip extends from edge to edge, the microbevel is finished. If it's not quite complete, give the blade one or two more strokes.

The secret to making a microbevel is knowing when to quit. If it's any wider than "micro," you're getting good exercise removing metal, but you're not improving the edge. And it will make honing the microbevel harder the next time.

REMOVE THE BURR. When the microbevel is complete from edge to edge, it will have left an almost invisible burr. Remove this burr by placing the back down on the finishing stone and concentrate on giving the back one last polish.

REHONING THE MICROBEVEL. A microbevel becomes appreciated when the blade looses its fine edge. Rehoning to that ultimate edge takes just a few moments because only a microscopic amount of metal needs to be removed. The secret is not to let the blade get dull before rehoning.

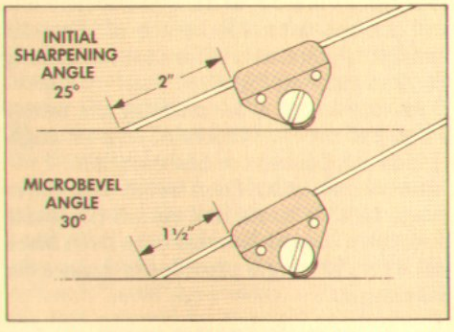

1 *The bevel angle is controlled by the distance the blade projects from the jig. A longer distance sets sharpening angle; a shorter distance sets microbevel.*

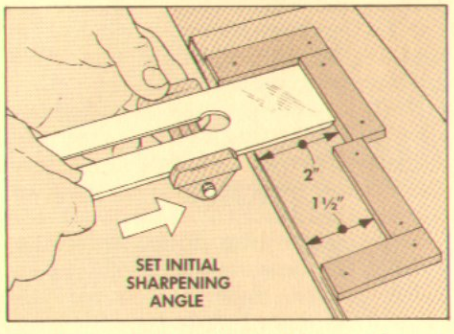

2 *A simple jig makes setting (and resetting) the sharpening and microbevel angles simple. Masonite strips control blade projection and align blade square.*

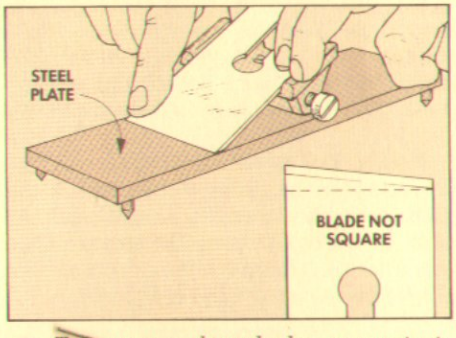

3 *To square a skewed edge, concentrate grinding pressure on the "long" corner. When edge is square, continue grinding until bevel surface is flat and straight.*

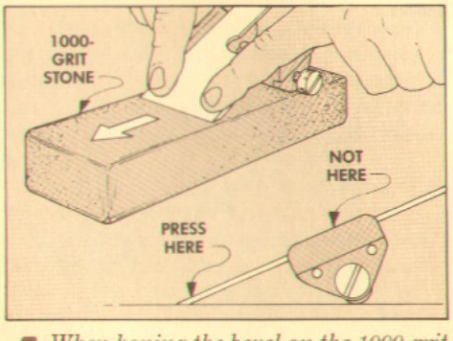

4 *When honing the bevel on the 1000-grit stone, apply pressure on the forward stroke only. Concentrate pressure over the blade edge — not the jig roller.*

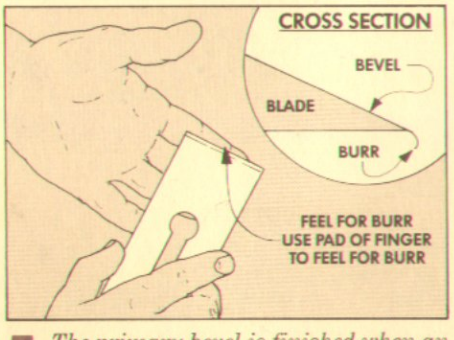

5 *The primary bevel is finished when an even burr extends the full length of the edge. To feel for burr, draw the blade edge lightly across pad of finger.*

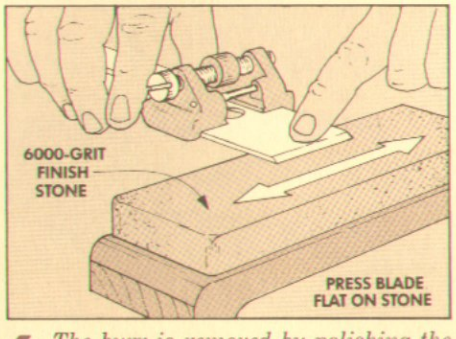

6 *The burr is removed by polishing the back on the finish stone. Press back flat on stone and stroke parallel to the blade edge until the burr disappears.*

Wooden Plane

AN UPDATED VERSION OF A TRADITIONAL TOOL

I will admit to a special fondness for wooden planes. I know iron planes are easier to adjust, and hold up a lot longer, and don't need any special attention. But wooden planes are just a lot nicer to work with. They feel better in my hand and give a nice warm feeling that iron planes just don't have.

My fondness for wooden planes hasn't left me blind, though. The old planes weren't perfect. So when I designed this wooden smooth plane, I took a hard look at the shortcomings of the old models and incorporated a few features I feel have been missing on wooden planes.

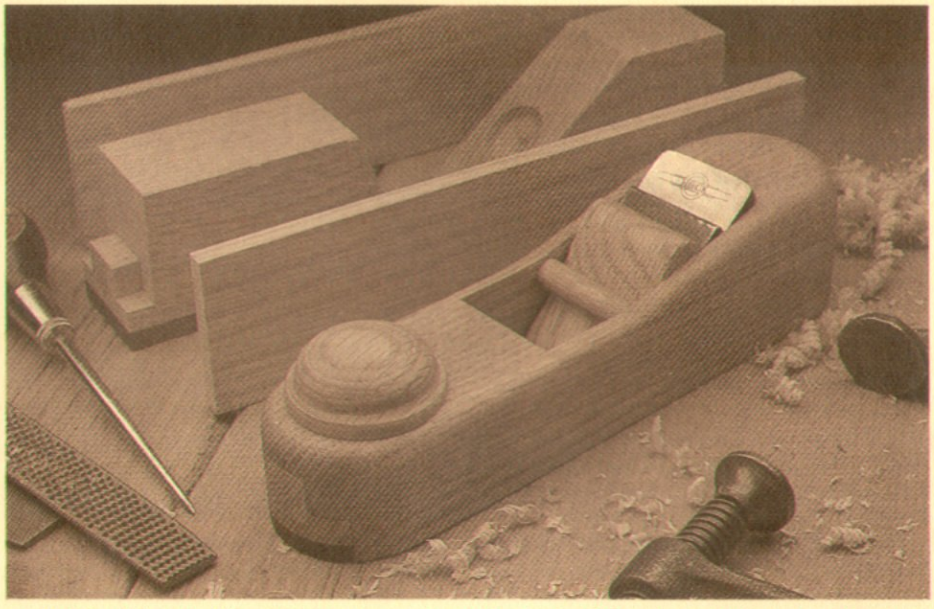

SOMETHING OLD, SOMETHING NEW

The biggest problem with wooden planes is that the throat opening gets wider as the sole wears and there's no way to adjust it.

To solve this problem, I borrowed the sliding throat plate idea from block planes (see *Woodsmith* No. 46). By loosening the front knob, I can slide the lower part of the front block to compensate for wear, and have the versatility of an adjustable throat.

Since this is my plane, I deviated from the traditional 45° blade mounting angle. A lower angle of 40° seems to be better for all-around use. And this lower angle positions the top of the 3½"-long blade even with the top of the plane, so it doesn't dig into my hand. (See Sources, page 24 for more on this blade.)

Finally, I've never understood why the throat should be closer to one end of the plane than the other. So I positioned the blade so it projects from the center of the sole where it gets maximum support at both the beginning and the end of a pass.

MAKE THE BODY

Like most wooden planes, this one looks like the center has been mortised out for the blade and wedge assembly. Actually, it's a sandwich with two thin side panels on the outside and two angled blocks inside.

I began by cutting the main body stock to size from 8/4 (1¾") stock. Start with a piece of hardwood about 9" long and 2" high, see Fig. 1. (The choice of wood is optional. I've used oak, walnut, maple, and a variety of exotic woods to make this plane.)

Next, I glued a thin slab of lignum vitae wood to the bottom to act as the sole. (Lignum vitae makes an ideal sole because it's extremely dense and wear-resistant, see Sources, page 24.)

When the glue dries, rip this block to final width. This measurement should be 1/16" wider than the blade to allow for skew adjustments. Since I used a 1½"-wide blade, I ripped the stock to 1 9/16".

Note: When gluing the sole in place, make sure that the grain of both the stock and the sole slope in the same direction — toward the back of the plane. This makes the plane slide more smoothly when planing.

CUT OUT BODY BLOCKS. After the main body stock is ripped to width, the front and rear blocks are cut to size. Since the blade will project from the center of the sole, mark this point as a reference for making the first cut, see Fig. 1.

REAR BLOCK. After marking the center point, cut the rear block (A) at a 40° angle (which establishes the blade angle).

FRONT BLOCK. Then reset the miter gauge to a 70° angle and cut off the waste from the main stock to make the front block (B). (The 70° angle provides clearance for shavings.)

SLIDING THROAT PLATE

After the front and rear blocks are cut to size, the sliding throat plate (C) is ripped from the front block.

FIGURE 1

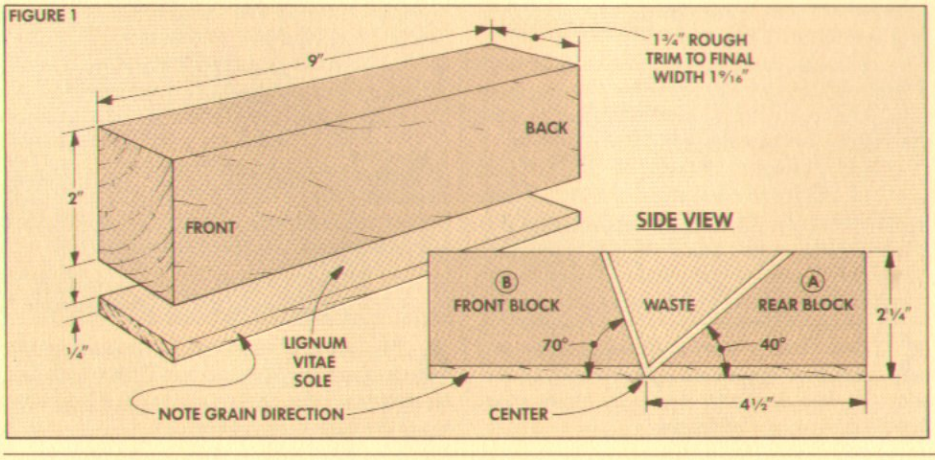

FIGURE 2

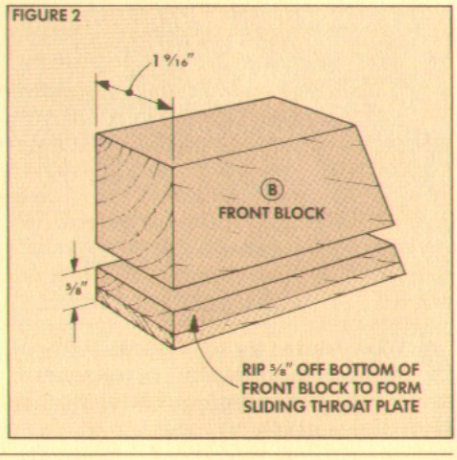

CUT THROAT PLATE. To make the throat plate, first set the table saw fence ⅝" from the blade and saw off the bottom to form a laminated plate, see Fig. 2.

CUT KEY GROOVE. Then cut the grooves for the key (D) in the front block (B) by adjusting the router table fence to make a ¾"-wide groove in two passes with a ½" straight bit, see Fig. 5. Rout a ½"-deep groove in the bottom of the front block (B), see Fig 3.

Shop Note: To keep the small pieces from catching on the bit opening in the fence, I made a facing for the router table fence from ¼" Masonite.

The same groove is routed in the top of the adjustment plate (C), but it's only ⅛" deep — just enough to hold the key in position while the glue dries, see Fig. 4.

Shop Note: The adjustment plate is too small to pass over the router bit by hand. I used a rubber grout trowel as a hold down, see Talking Shop, page 23.

INSTALL KEY. After the grooves are routed, cut the key (D) to fit. This key is glued into the adjustable plate only. (The upper part slides in the groove in the front block, see Fig. 6.)

LOCATE INSERT. The adjustment plate is mounted to the front block with a bolt that extends through the front block and into a threaded insert that's mounted in the adjustment plate key, see Fig. 8.

To mark the location for the threaded insert, use a ¼" brad point bit to bore through the center of the front block. Set the depth stop so the point of the bit just breaks through the bottom of the block and marks the surface of the key, see Fig. 7. Then bore a hole at the mark on the key for the threaded insert.

INSTALL INSERT. To install the threaded insert, I used the drill press. First cut the head off of a ¼" bolt and thread a nut part way up. Next, screw the insert onto the bolt so it "jams" against the nut. Then with the bolt gripped by the drill press chuck, hand twist the insert straight down into the key while exerting downward pressure on the quill, see Fig. 9

REAR BLOCK. That completes the front block. Next, I worked on the rear block (A). The angled face of this block supports the plane blade. But to allow space for the head of the screw (that holds the blade and cap iron together) I drilled a ¼"-deep recess in the angled face with a 1" Forstner bit, see Fig. 10.

Note: The 1" diameter leaves room to adjust the blade, see Fig. 12.

To locate this hole, measure the distance from the end of the cap iron to the threaded hole in the cap iron. (This distance is 1½" on the Hock blade used for this plane.) Next, make a mark this same distance up from the bottom edge of the block centered on the face. Then secure the block in a vise and bore the hole, see Fig. 11.

FIGURE 3

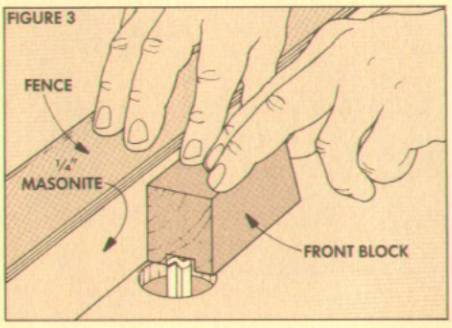

FIGURE 4

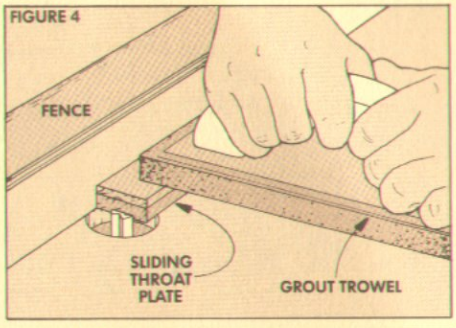

FIGURE 5

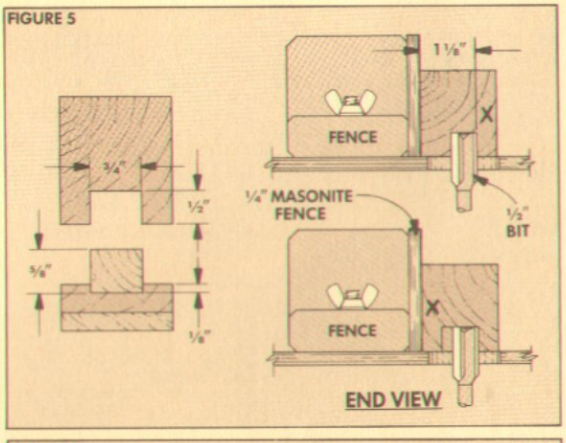

FIGURE 6

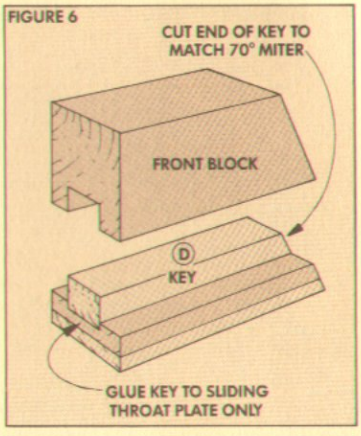

FIGURE 7

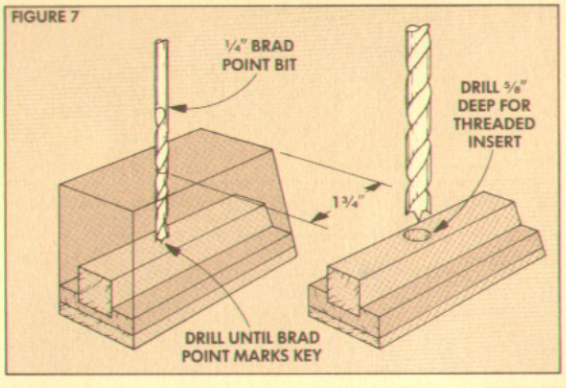

FIGURE 8

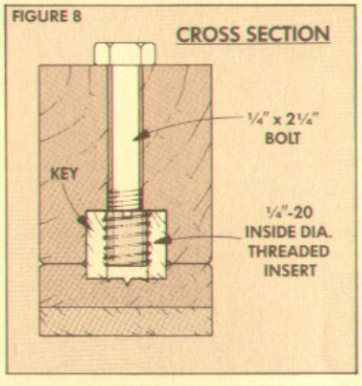

FIGURE 9

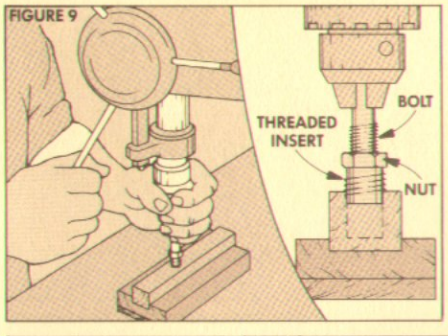

FIGURE 10

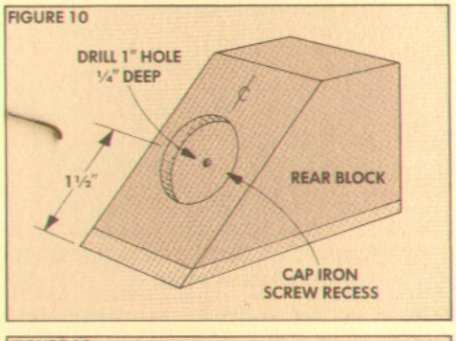

FIGURE 11

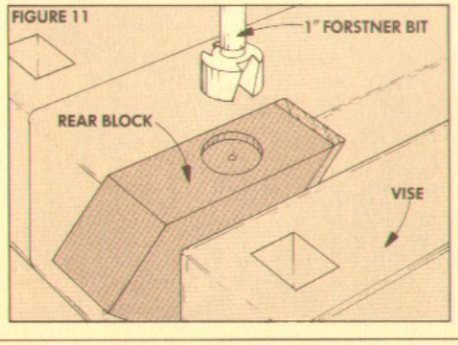

FIGURE 12

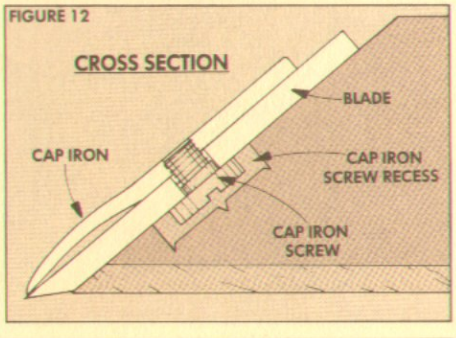

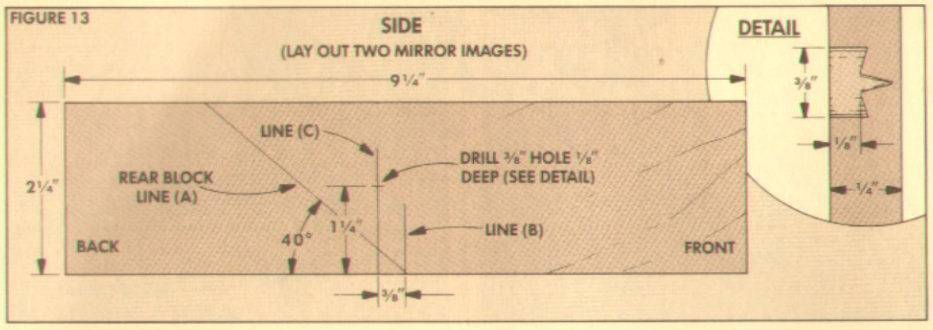

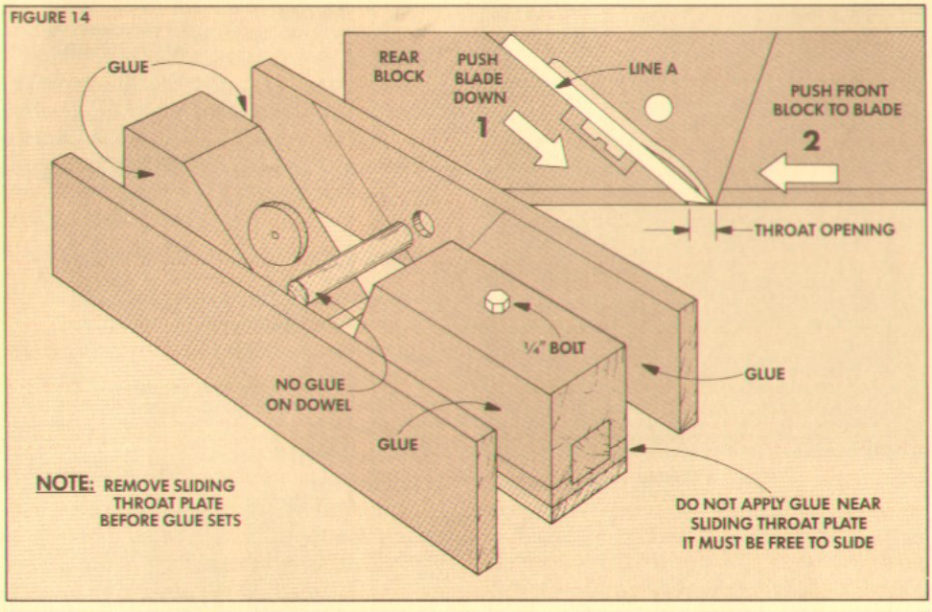

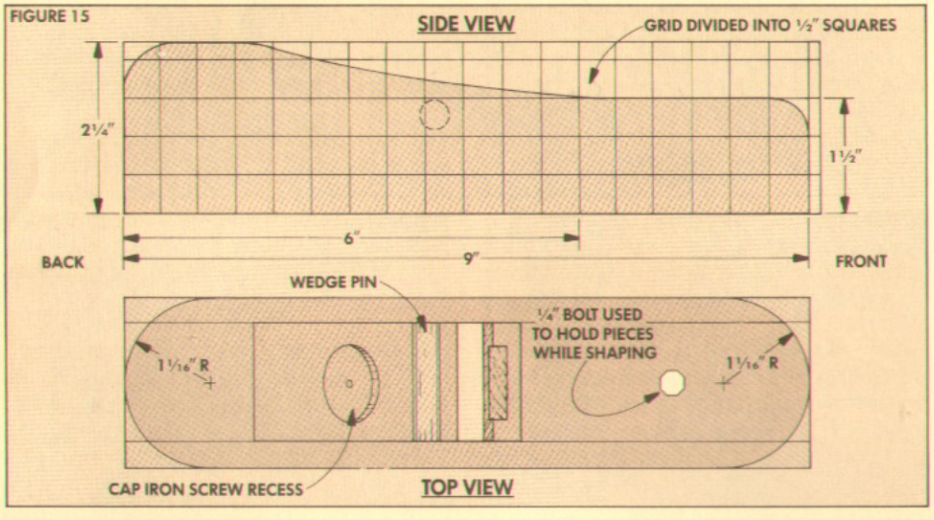

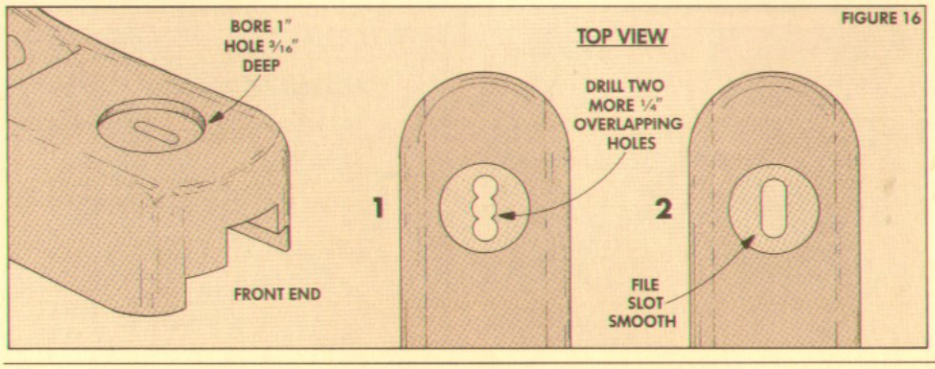

SIDE PANELS

After finishing the body blocks I made the side panels that hold them together to form the plane. Resaw 4/4 stock to ¼" thick by 2¼" wide by about 9¼" long, see Fig. 13.

MARK REAR BLOCK POSITION. After the side panels are cut to size, mark the position of the rear block on the inside surfaces. Begin by making sure the grain slopes downward from the front of the plane, see Fig. 13. (This is to make it easier to plane the bottom edges flush with the sole later.)

Now, place the rear block against the inside face of the side panels with the bottom and back edges flush. Then trace the angle (40°) of the blade support face.

LOCATE WEDGE PIN HOLE. After the angled line (A) is drawn, it's used to locate the pin that will hold the wedge in place. Begin by drawing a vertical line (B) that starts where the angled line meets the bottom of the side panel, see Fig. 13. Next, draw another line (C) parallel to this line ⅜" toward the rear of the panel. Then, measure 1¼" up from the bottom on this line (C) and mark a point for the wedge pin.

BORE WEDGE PIN HOLE. After the location of the wedge pin is marked, a ⅜" stopped hole is bored in each panel to hold the pin. Use a Forstner bit to bore this hole ⅛" deep (about halfway through the panel), see Detail, Fig. 13.

ASSEMBLE PLANE BODY

Before final assembly of the plane, the wedge pin is cut to length.

WEDGE PIN. The wedge pin is a ⅜" dowel approximately 2 13/16" long. The exact length should allow just a little space in the hole bottoms when the panels are pressed against the blocks. (Note: The wedge pin is not glued in place. It spins in the holes when the wedge is tightened.)

POSITION FRONT BLOCK. After the wedge pin is cut to length, the position of the front block has to be marked. To do this, dry assemble the plane with the front face of the rear block aligned with the angled line (A) on the panel.

Next, set the blade in place against the rear block, see Fig. 14. Then, slide the front block back until the front edge of the throat opening touches the blade edge. Now trace the angled face of the front block on the inside faces of the side panels to align this block when gluing.

GLUING. After the front block outline is drawn, the panels and blocks are glued together to form the plane. Before applying the glue, I used a ¼" bolt to temporarily fasten the adjustable plate to the front block, see Fig. 14. Also, I pressed the wedge pin into one of the holes in the side panels so I wouldn't forget to do it later.

Now apply glue to the sides of the blocks (not on the side panels). Be careful not to get glue on the side of the adjustment plate

or close to the edges of the angled faces where it could squeeze into the "mortise."

Next, press the panels together, making sure the wedge pin seats securely. Then align the blocks with the lines traced on the insides of the panels and clamp tightly.

After the glue has dried for a few minutes, loosen the bolt and remove the throat adjustment plate so excess glue doesn't get it stuck in place.

SHAPING. After the glue dries, the plane can be brought to its finished shape. Begin by pressing the sliding plate back in place. Then trace the shape you want (this can be any nice shape that fits your hands), and bandsaw away the waste, see Fig. 15.

After it's cut to rough shape, plane the bottom edges of the side panels flush with the sole. Then smooth all the contours with a rasp or file and sand the shape smooth, see Fig. 17.

MAKE THE KNOB

After shaping the plane, I made the dome-shaped knob. This knob serves two purposes: 1) it's a palm-filling front handle; and 2) it twists to lock the throat adjustment plate in place.

So the knob would bear only on its perimeter when tightened, I bored a 1"-dia. hole 3/16" deep over the bolt hole on the top of the front block, see Fig. 16. Then I drilled overlapping holes to elongate the bolt hole, forming a slot for adjustment, see Fig. 16.

TURN THE KNOB. The knob is turned from a 2"-square block cut from 4/4 stock. Although this seems like a job for a lathe, I found it can be done on a drill press.

PREPARE BLOCK. To prepare the block, glue a 1/4" x 1" hex head bolt into the center with epoxy, see Fig. 18. After the epoxy hardens, scribe a circle on the block and cut away the corners, see Fig. 19.

RASP TO SHAPE. After the corners are cut off the block, it can be shaped on a drill press with a rasp. To do this, secure the bolt in the chuck. Then, at low speed, bring the block to a rough dome shape.

When the knob was roughly shaped, I increased the speed to about 1,300 rpm and used sandpaper for final shaping.

MAKE THE WEDGE

Now the plane is finished except for the wedge that holds the blade in place.

CUT OUT WEDGE. The wedge is bandsawn to shape from a 1½"-wide piece of 4/4 stock, see actual size profile in Fig. 22. To get a perfect fit after the wedge is cut to rough shape, plane the entire back face of the wedge. Stop planing when the wedge can be pushed under the pin to about 1/3 the way up from the end, see Fig. 23.

FINISHING TOUCHES

For a finish, I applied two coats of teak oil. This marine finish doesn't get sticky when my hands get sweaty, see Sources, page 24.

FIGURE 17

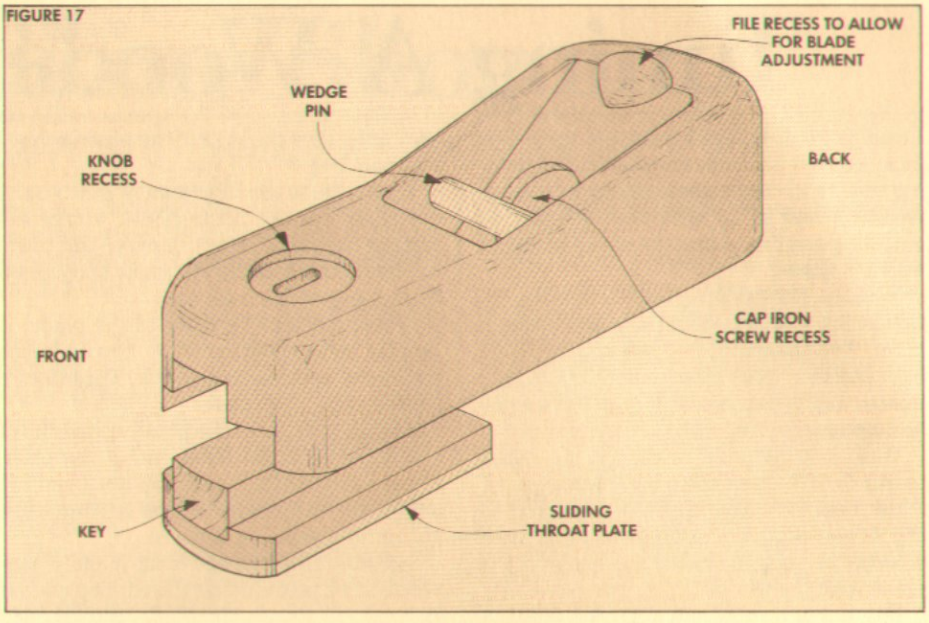

FIGURE 18

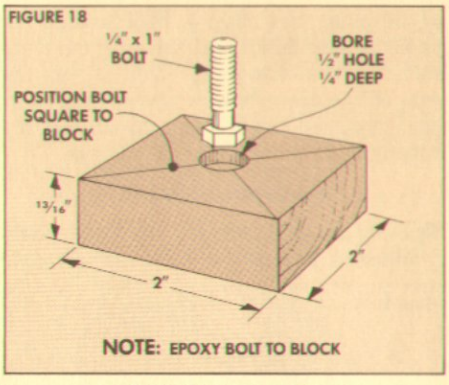

FIGURE 19

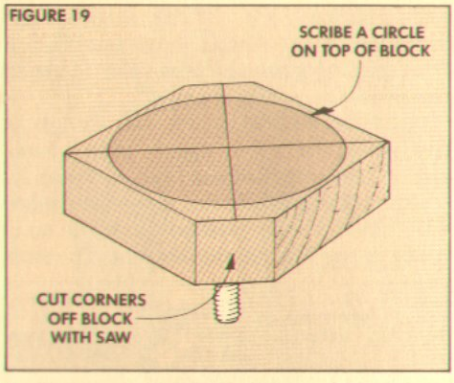

FIGURE 20

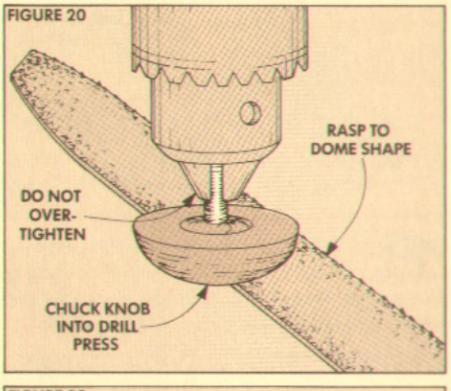

FIGURE 21

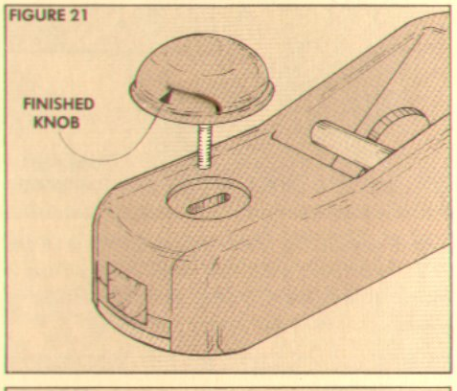

FIGURE 22

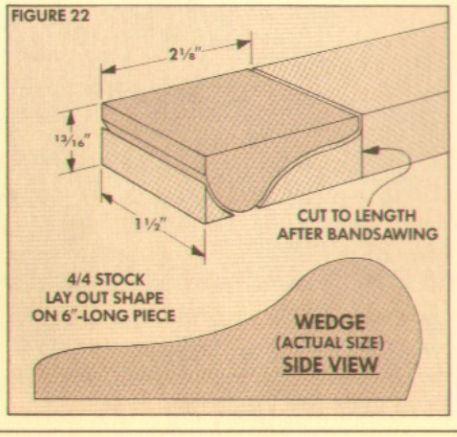

FIGURE 23

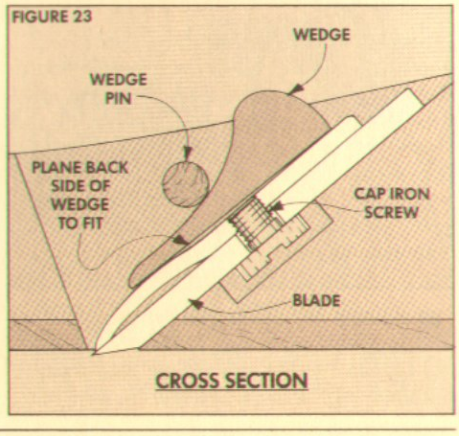

Tuning A Wooden Plane

I can't prove this, but I think the transition from wooden planes to metal ones had nothing to do with the plane's ability to smooth wood. It had to do with the difficulty of adjusting and fine tuning the blade setting in wooden planes.

Wooden planes have only a simple, intimidating wedge to hold the plane blade in place. And the method of tapping the blade into position looks like something only a master craftsman could do with efficiency and accuracy.

Well, just like a lot of things, it's easier than it looks — once the trick is learned.

SECURE THE BLADE. Before getting to the trick, the first step in setting up a wooden plane is to secure the blade in the plane with the wedge.

Begin by placing the plane on a piece of softwood, see Step 1. (This protects the blade edge and keeps your workbench from getting gouged.) Slide the blade in and press the wedge in place.

TIGHTEN WEDGE. After the wedge is positioned, drive it in tightly with a hammer — two or three good taps, see Step 2.

SET THE BLADE. At this point the wedge will probably have pushed the blade so it projects too far out the bottom. To reset the blade, give the rear of the plane a sharp rap, see Step 3.

That's the trick. The idea is that you're not adjusting the plane blade, you're adjusting the plane body. To move the blade up, you actually move the plane body down by tapping on the back end.

When you tap the body of the plane, it quickly shifts position while inertia keeps the blade in the same position. The effect is repositioning the blade.

To sight this, hold the plane upside down and sight from the front end of the plane toward the cutting edge. Tap until you see only a slight glimmer of the cutting edge above the surface of the sole.

SQUARE THE BLADE. What usually happens at this point is that the cutting edge is skewed. To square the blade, tap the side of the plane, see Step 4. Still holding the plane upside down and sighting over the sole, tap the "low side." That is, tap the side of the plane where the cutting edge has dropped down into the throat until the cutting edge is parallel with the sole.

FINE ADJUSTMENTS

Sighting along the sole gets the blade roughly adjusted. But my eye isn't good enough to fine tune the depth for nice thin shavings. This is best done by trial and error.

There are two different techniques I use to fine-tune the depth of cut. On some planes I make adjustments by tapping the front and back end of the plane body alternately to set the cutting depth.

On other planes I give the back end of the plane one good smack so the cutting edge shifts all the way up into the plane body. Then I tap down on the top of the blade itself, see Step 5.

Shop Note: I use a Stanley "Dead Blow" mallet when tapping on the wooden body. But I switch to a ball peen hammer or tack hammer to tap on the blade.

FINAL DEPTH. The true test of the cutting depth is to make a trial cut and make adjustments until the blade is set to cut to the depth you want.

FINAL SQUARENESS. When making these fine adjustments, if the blade needs a slight lateral adjustment (to take an even cut from side to side), just tap the top corners of the blade.

All of this tapping may sound tedious, but it really takes only a few seconds to master the trick needed to set the blade to make perfect shavings.

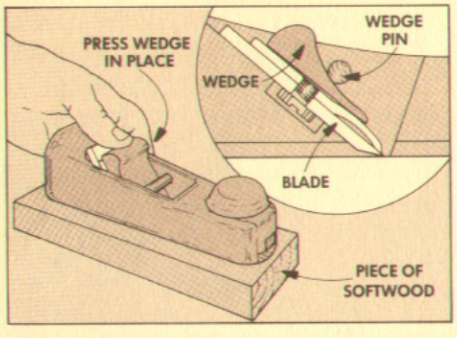

1 *Position the blade by centering it in the "mortise" with the edge resting on a block of softwood. Then, hold the blade in place and press the wedge in tightly.*

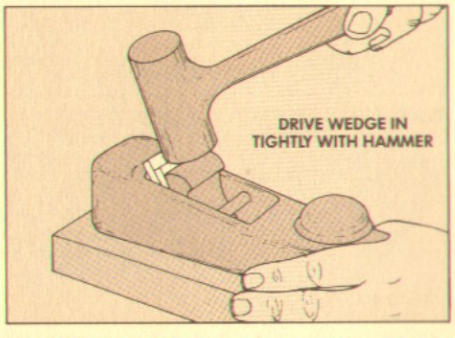

2 *Secure the blade by driving the wedge in tightly. A "dead blow" mallet will force the wedge between the blade and the pin without deforming the top of the wedge.*

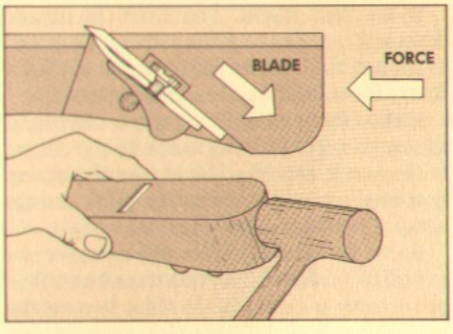

3 *Reset the blade for final adjustment by tapping rear of plane body. The plane moves in relation to blade, so the edge will be drawn back into the throat.*

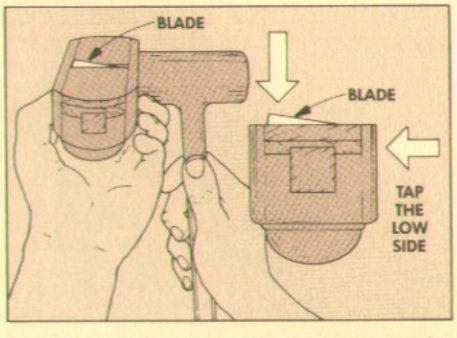

4 *Square the blade for an even cut by tapping on the side of the body. Directing the blow to the side where the corner of the blade edge is low will lower the high side.*

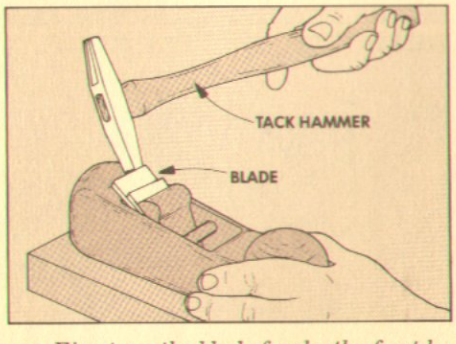

5 *Fine tune the blade for depth of cut by tapping the top of the blade with a small steel hammer. For skew adjustments, tap the top corners of the blade.*

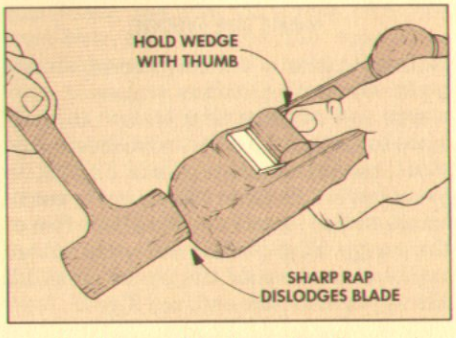

6 *To disassemble plane for sharpening, grip the body with thumb pressure back against top of wedge. Then tap rear of body to dislodge blade and wedge.*

Talking Shop

AN OPEN FORUM FOR COMMENTS AND QUESTIONS

GROUT TROWEL PUSHER

Sometimes I get a little nervous when I'm cutting a very small workpiece on the table saw or router table. (For example when I was routing the sliding throat plate for the wooden plane, see Fig. 4 on page 19).

I also don't like the idea of my fingers pressing down on top of a board when it's passing over a table saw blade, router bit, or jointer knives when cutting rabbets or dadoes. Then I can feel the vibration right under my fingers.

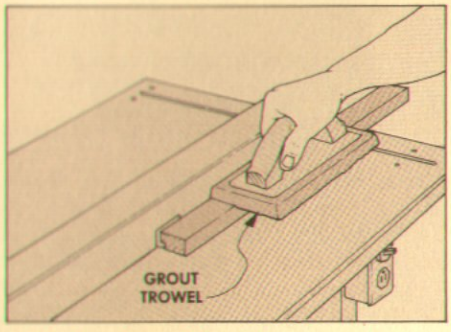

To solve the problem, I've started using a grout trowel as a hold-down/push-stick for these situations. Grout trowels are made for putting the grout between ceramic tiles and are readily available at building centers or lumber yards for about $2 to $5. The one I found measures about 4" x 9" and has a nice big handle to grip. It also has a soft, sponge rubber bottom that grabs the workpiece and holds it securely as it's pushed over the cutter.

The long, flat surface of the grout trowel puts uniform pressure down on the workpiece without increasing the pressure on my nerves.

ROUTING PLUGS FLUSH

While I was building the table saw cabinet and the outfeed table for this issue, I realized that there are a couple ways to cut off plugs flush with the surface.

But that's getting ahead of the story. First, the holes have to be filled with plugs. I like to use plugs (cut with a plug cutter) rather than dowels to fill counterbored screw holes. One reason is that plugs can be cut from the same wood (even the same board), and I can get an almost perfect color match to the surrounding wood.

Also the grain of a plug can be oriented to run the same direction as the surrounding wood. When you use a dowel, the grain runs the length of the dowel, and so the grain will be perpendicular to the surrounding surface. What you see on the dowel is end grain — it looks and finishes differently than the surrounding wood. (Sometimes you want this appearance as a design contrast, but that's another story.)

The other problem with using a dowel is shaving it flush with the surface after it's been cut off close. End grain just won't shave off as smoothly as side grain. And if you try to sand a dowel down flush with the surface, the end grain of the dowel won't sand as easily as the surrounding area. You end up with a dished-out area around a raised dowel.

That gets us right back to where we started: How do you cut off plugs (or dowels) flush with the surface?

One way is with a hand saw. You can cut a plug about 1/16" above the surface with a back saw or dovetail saw, and then shave the rest off flush with a sharp chisel.

Note: If you try to cut off the plug perfectly flush, the set on most saw teeth is likely to scratch the surrounding surface.

Another way is to use a router. I used a router to cut (rout) off the plugs on the table saw cabinet and outfeed table. It works much more quickly and easily than cutting them off with a saw. And there is less chance of chipout with a router.

To rout off plugs, mount a straight bit in the router. I used a 3/8" straight bit for the 1/2" plugs. Then set the router on a flat surface and adjust the depth of cut so the bit is just a hair above the surface, see the Detail in the drawing below.

Once the router depth is set, lift the router up above the plug to be cut off. Then slowly bring it down gently over the plug in sort of a

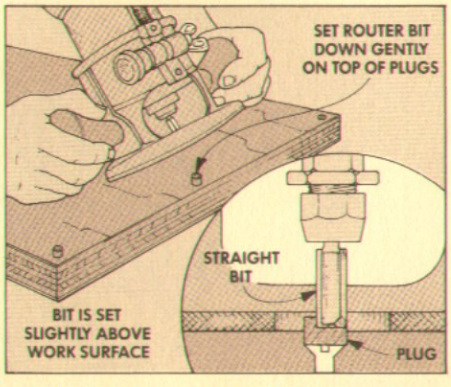

swirling fashion — like a helicopter coming in for a landing. Slowly work downward cleaning off the top of the plug until the router base rests flat on the surface of the wood.

Note: This is even easier to do with a plunge router since the base of the router can be kept on the surface the whole time and the router "plunged" down onto the top of the plug.

After routing, there's still a little bit more to shave off with a sharp chisel since the router bit was set a "hair" above the surface. To do this put the flat back of the chisel down tight on the surface of the work and slice it off smooth.

ALIGNING TABLE SAW PULLEYS

After I finished building the table saw cabinet, I decided to take a few minutes to "tune up" my saw. This usually involves getting the saw blade lined up parallel with the miter gauge grooves and adjusting the rip fence and miter gauge.

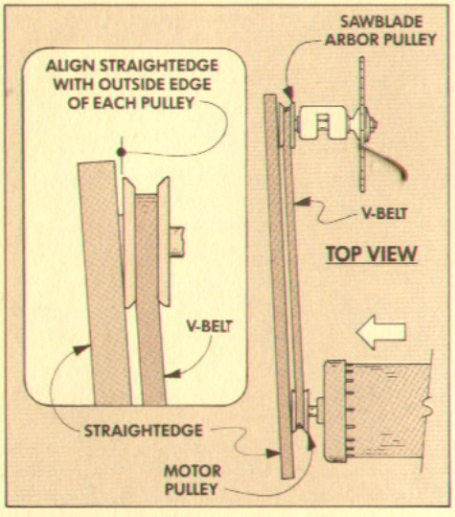

But there's another step that's often overlooked on belt-driven saws: aligning the motor pulley and the pulley on the sawblade arbor. If the pulleys aren't perfectly in line with one another or tight on their arbors, the belt won't run true and the saw will vibrate. Misalignment can also cause extra wear on the V-belt and the side pressure on the pulleys might actually loosen them on their arbors.

To determine if the pulleys are aligned, first remove the cover that's over the motor pulley and belt. Then hold a straightedge (be sure it's perfectly straight) alongside the pulleys. If the pulleys are in perfect alignment, the straightedge should touch the *outside* edge of each pulley.

If the pulleys aren't lined up, loosen the motor on the mount (it's usually fastened with bolts in a slot) and shift it until it's close to the correct position. Then, for final adjustment, loosen the set screw in the motor pulley and tap it slightly in or out until both pulleys are perfectly aligned and retighten the set screw.

Sources

TABLE SAW CABINET

You can order the hardware for the table saw cabinet from the following sources:

THE WOODWORKERS' STORE, 21801 Industrial Boulevard, Rogers, MN 55374; (612) 428-2199 (Catalog: $2.00). *Drawer Pulls (handles)*, 9 needed, solid oak, bore 3¾", ⅝" dia., Order No. D5620, $1.95 each, $17.60 for 10. *Butt Hinges* (1 pair), brass, 2" long, 1" open width, Order No. D1222, $2.10 per pair. *Magnetic Catch*, Order No. D2107, $.95. *Pin Style Shelf Supports* (8), brass, Order No. D9156, $.15 each.

WOODCRAFT SUPPLY CORP., 41 Atlantic Ave., Dept. 116, P.O. Box 4000, Woburn MA 01888; 800-225-1153 (Catalog: Free). *Swivel-Brake Casters* (2 pair), 3"-dia. x 1¼"-wide rubber wheels, weight capacity rated at 210 pounds each, mounting screws not included, $17.50 ppd. per pair.

ROUTER BITS. We used three router bits that may not be available from all local retailers to build the table saw cabinet.

The *½" core box bit* is available in the Sears 1986/87 Power and Hand Tool Catalog as Order No. 9 GT 25546, $12.99.

The *flush trim bit* used to clean up the side openings in the cabinet must have a *cutting length* of at least ¾". (Note: Laminate or veneer trimmers often only have cutting lengths of ½".)

The *⅛" round-over bit* isn't always necessary. It makes a uniform radius, but this radius can be made with a file or sandpaper.

All three bits can be ordered from:

MASON & SULLIVAN CO., 586 Higgins Crowell Road, West Yarmouth, MA 02673; (617) 778-0475. *Core Box Bit*, ½", Order No. 8482X (¼" shank) or No. 8483X (½" shank), $12.50. *Flush Trim Bit*, ball bearing guide, 1" carbide length, Order No. 8814 (¼" shank) or No. 8819 (½" shank), $7.95. *⅛" Rounding Over Bit*, Order No. 8834 (¼" shank) or No. 8835 (½" shank), $13.95.

"BUNGEE" CORD. To hold the plastic trash bag to the chip catcher frame inside the cabinet, we used a large rubber band from an office supply store. You could also use an elastic hold-down or "bungee" cord sold at most bicycle and camping stores.

WOODBURNING PEN

You can order a woodburning pen for making the "heat decals" described on page 3 from:

CONSTANTINE'S, 2050 Eastchester Road, Bronx, NY 10461-2297; 800-223-8087 (Catalog: $1.00). *Woodburning Pen*, Order No. 57WB3, $16.95.

BEVEL HONING GUIDES

You can order the Eclipse and Lee Valley honing guides discussed on pages 14-15 from:

GARRETT WADE COMPANY, INC., 161 Avenue of the Americas, New York, NY 10013; 800-221-2942 (Catalog: $4.00). *Eclipse Honing Guide*, Order No. 10M07.01, $8.50. *Lee Valley Honing Guide*, Order No. 80J01.01, $22.50. *Lee Valley Bevel Setter*, Order No. 80J02.01, $8.00.

You can order the Eclipse and General honing guides from:

WOODCRAFT SUPPLY CORP. (see address above). *Eclipse Honing Guide*, Order No. 03A21, $10.95 ppd. *General Sharpener*, Order No. 06G04, $16.30 ppd.

The Stanley honing guide can be purchased at many local lumber yards, hardware, and tool stores.

DIAMOND STONES

We have found it difficult to get *truly flat* diamond stones. There is one supplier that guarantees flat diamond stones:

WOODCRAFT SUPPLY CORP. (see address above). *6" Coarse-grit Diamond Stone*, Order No. 09C43, $37.50 ppd. *6" X-Coarse-grit Diamond Stone*, Order No. 02P15, $37.50 ppd. *8" Coarse-grit Diamond Stone*, Order No. 17X22, $64.00 ppd. *8" X-Coarse-grit Diamond Stone*, Order No. 17X32, $64.00. *12" Coarse-grit Diamond Stone*, Order No. 02P31, $87.50 ppd. *12" X-Coarse-grit Diamond Stone*, Order No. 02P42, $87.50.

WATERSTONES

The waterstones we use in the Woodsmith shop are King brand stones. You can purchase these stones from:

WOODCRAFT SUPPLY CORP. (see address above). *King 1000-grit Waterstone*, Order No. 11H21, $11.95 ppd. *King Deluxe "S" (6000-grit) Polishing Stone*, Order No. 11H51, $17.75 ppd. (Note: A combination 1000/6000-grit stone is available. Order No. 09C31, $15.95.)

STEEL GRINDING PLATE

You can order the plate and powder for grinding the back and bevel of plane blades from:

WOODLINE: THE JAPAN WOODWORKER, 1731 Clement Ave. Alameda, CA 94501; 415-521-1810 (Catalog: $1.50). *Honing Plate* (Kanaban), Order No. 01.654, $8.50. *Silicon Carbide Abrasive Powder* (Kongsha), 220-grit, Order No. 15.152.1, $.95.

Steel plate also can be purchased locally at scrap metal companies (look under "Scrap Metals" or "Steel Distributors" in the Yellow Pages). Silicon carbide abrasive powder often can be purchased at lapidary (stone polishing) supply houses.

REPLACEMENT PLANE BLADES

You can order Hock high-carbon steel replacement blades for Record and Stanley planes from:

WOODLINE: THE JAPAN WOODWORKER (see address above). *1¾"-Wide Blade*, Order No. 53.175, $15.95. *2"-Wide Blade*, Order No. 53.200, $16.95. *2⅜"-Wide Blade*, Order No. 53.238, $19.50. *2⅝"-Wide Blade*, Order No. 53.262, $21.50. (Other sizes available for block planes and spokeshaves. Write for free flier.)

You can order laminated blades with a high-carbon steel edge from:

FINE TOOL IMPORTS, P.O. Box 3271, 430 West 7th St., Chico CA 95927; 916-891-1686. *2"-Wide Laminated Blade*, Order No. WR-50, $17.00 ppd. *2⅜"-Wide Laminated Blade*, Order No. WR-60, $19.00 ppd.

PARTS FOR WOODEN PLANE

You can order a Hock blade and lignum vitae sole for the wooden plane shown on page 18 from:

WOODLINE: THE JAPAN WOODWORKER (see address above). *1½"-Wide Blade*, Order No. 53.0016, $22.95. (Note: We used the 1½"-Wide Blade for the plane we built, but Woodline also offers these other Hock blades: *1¾"-Wide Blade*, Order No. 53.0017, $24.95. *2"-Wide Blade*, Order No. 53.0018, $25.95.) *Lignum Vitae*, 2" x 18" piece approximately 5/16" thick (enough for two planes), Order No. 53.212, $7.95.

You can order the teak oil we used on the wooden plane from:

THE WOODWORKERS' STORE. (See address above). *Watco Teak Oil*, Order No. P1680, $7.75 per quart.

THREADED INSERT. You will need one threaded insert (sometimes called a "Rosan Insert") for the wooden plane. We learned (the hard way) that the *outside diameter* of threaded inserts can vary from manufacturer to manufacturer even though the inside diameter (bolt size) is the same.

In *Woodsmith* No. 38 we specified a 5/16"-#18 threaded insert from The Woodworkers' Store for a bunk bed project. We explained that you should drill a ½" hole to accept the insert (the 5/16" refers to the bolt size). A ½" hole is the correct size to drill for a 5/16" threaded insert obtained from most sources, but not that specific insert from The Woodworkers' Store. It required a 15/32" hole (as many readers told us).

The moral of the story is this: Buy your hardware *first*. Then drill the hole to match the hardware you purchased.

You can order a threaded insert for the wooden plane from:

THE WOODWORKERS' STORE. (See address above. Note: Minimum cash order $7.50). *Threaded Brass Insert*, ¼"-20, Order No. D8010, $.40 each.